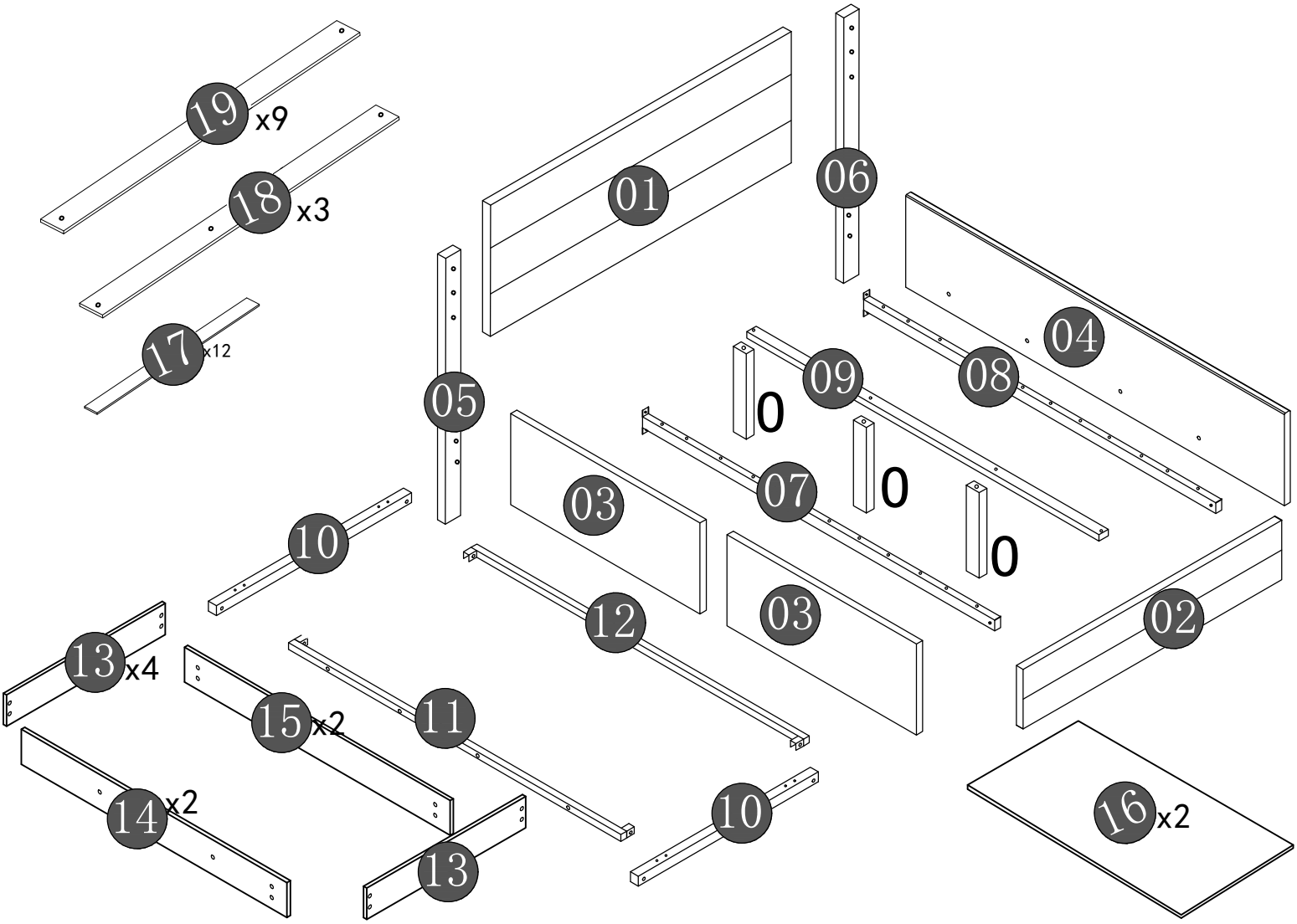

A	8*20	59	H		14	O	29.5cm	3
B	8*35	4	I		4	P		16
C	8*45	8	J		1	Q		16
D	8*50	13	K		4	R		1
E	5*40	8	L	4cm	2	S		1
F	M 8	8	M	4cm	4	T		1
G	M 5	8	N	1.5	8			

01

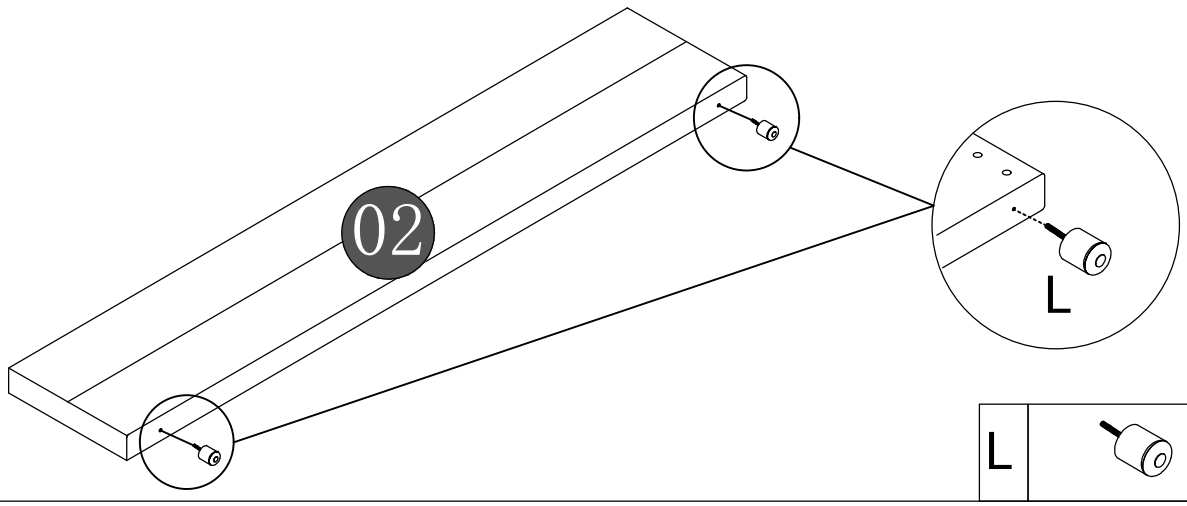

L	4cm	02

02

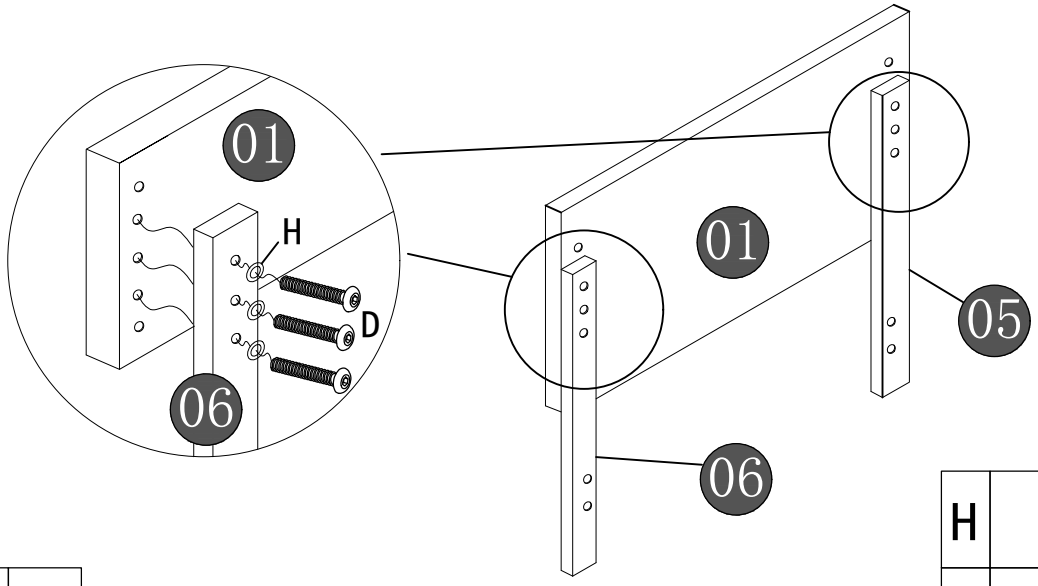

T		1

H		6
D	8*50	6

03

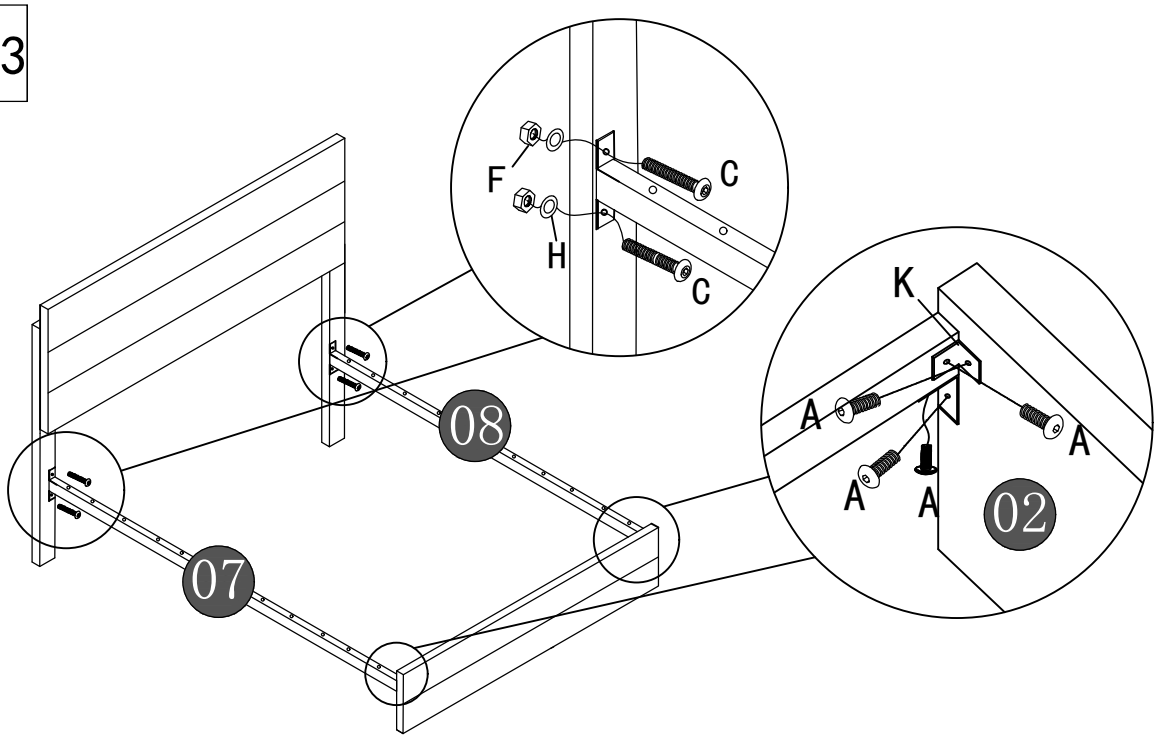

T		1

A	8*20	8
C	8*45	4
F	M 8	4
H		4
K		4

04

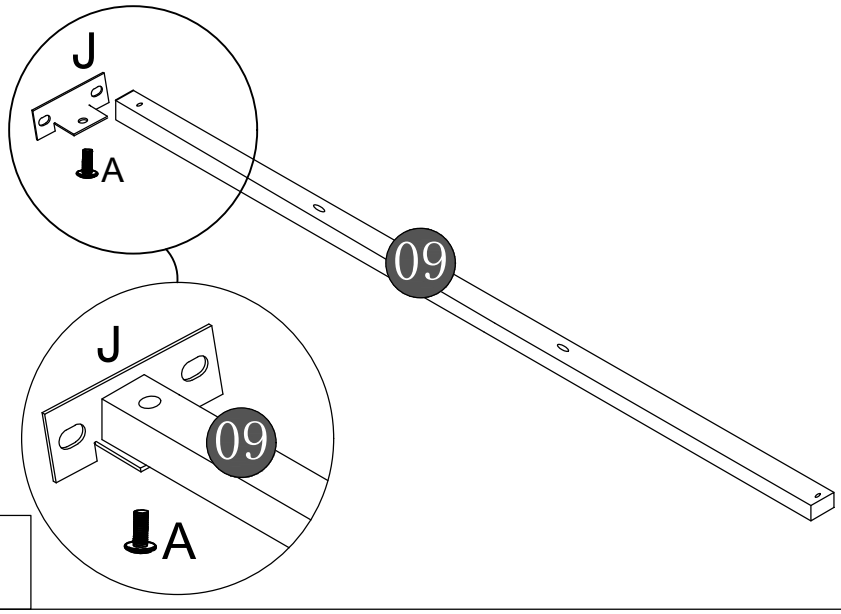

T		1

J		1
A	8*20	1

05

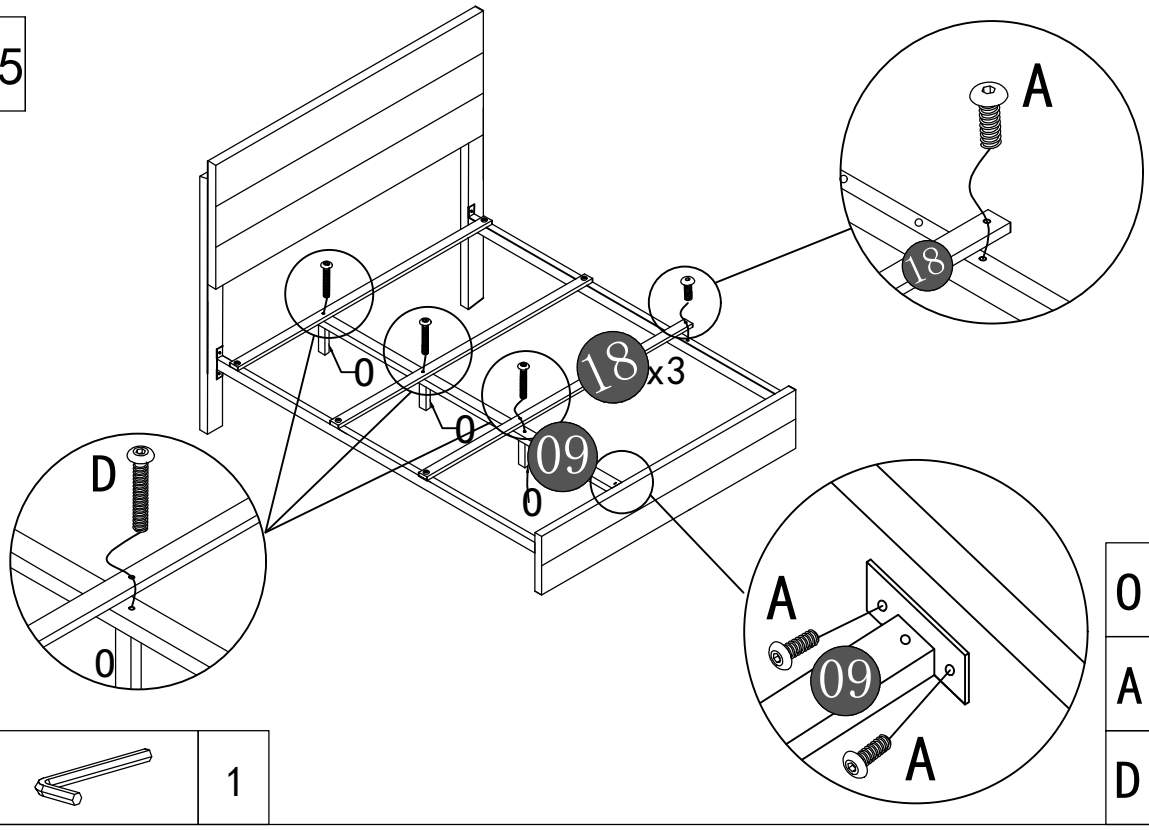

T		1

O	29. 5cm	3
A	8*20	8
D	8*50	3

06

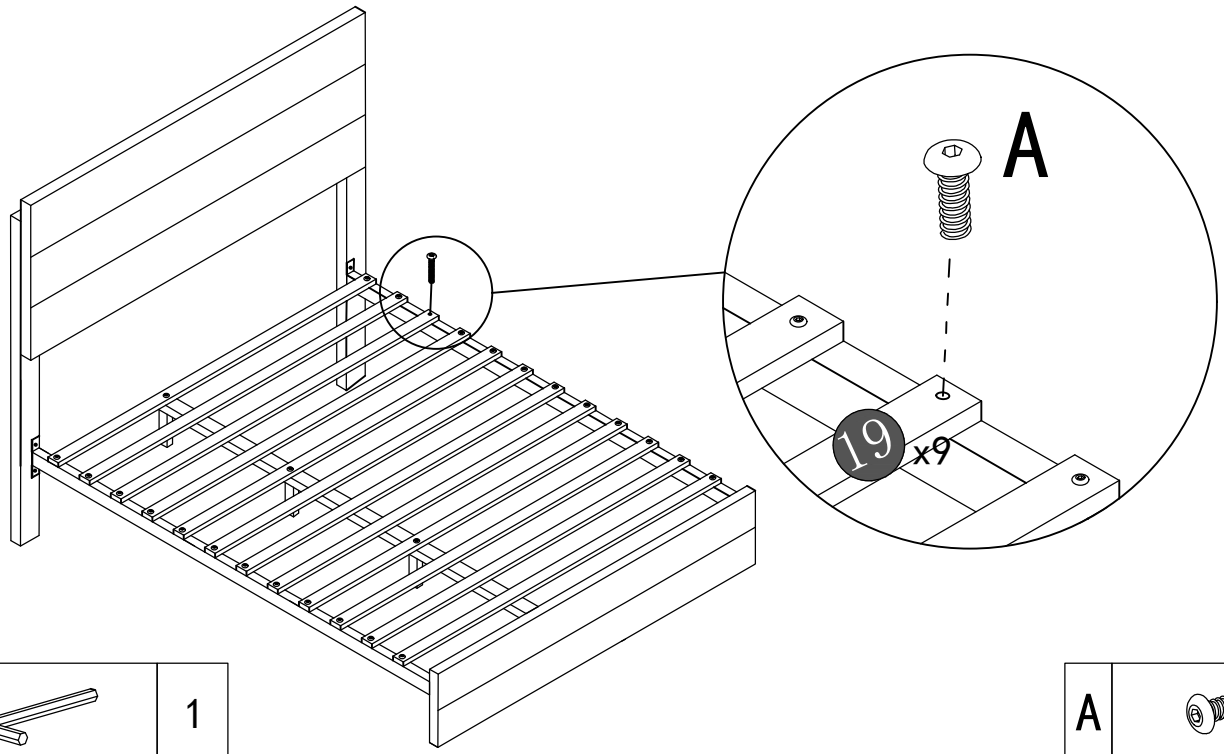

T		1

A	8*20	18

07

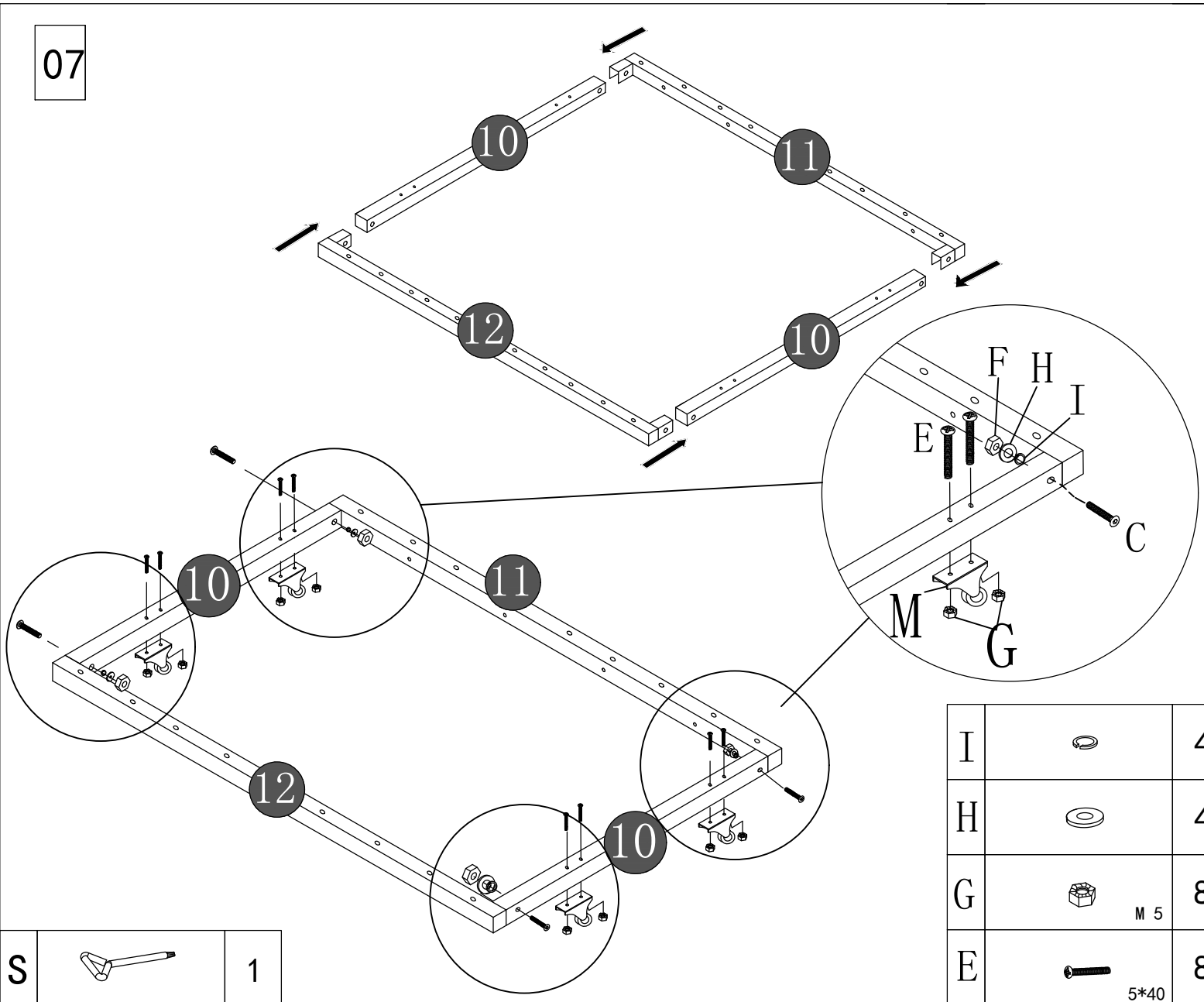

I		4
H		4
G	M 5	8
E	5*40	8
C	8*45	4

S		1
T		1

M		4

F	M 8	4

08

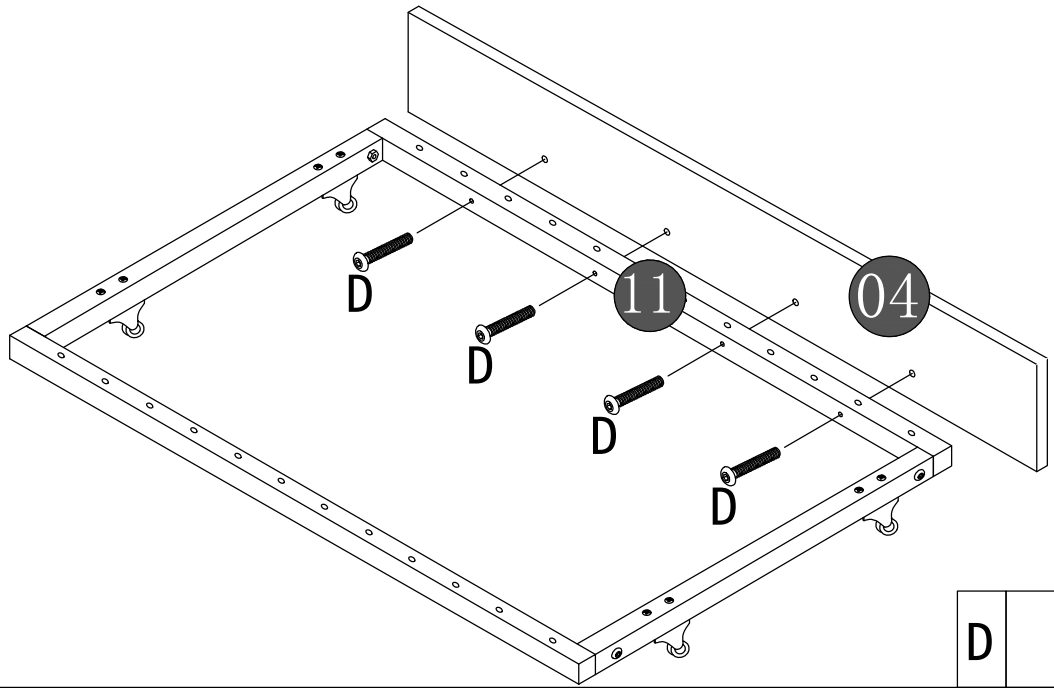

D	8*50	4

09

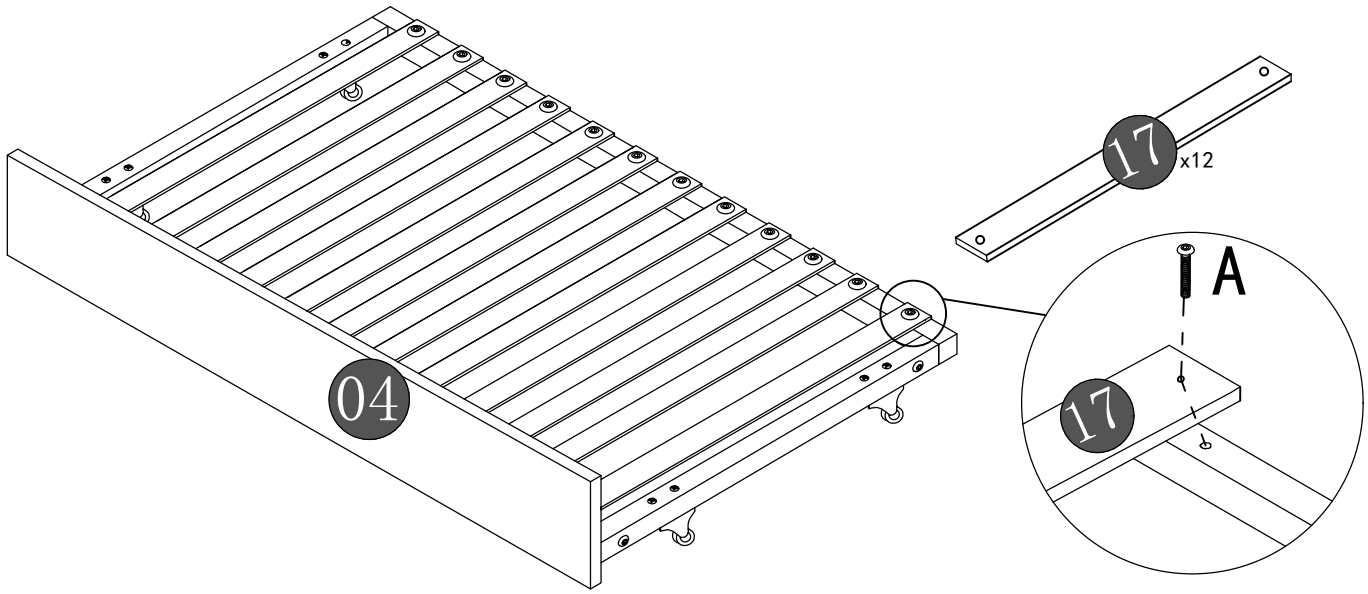

T		1	A	8*20	24

10

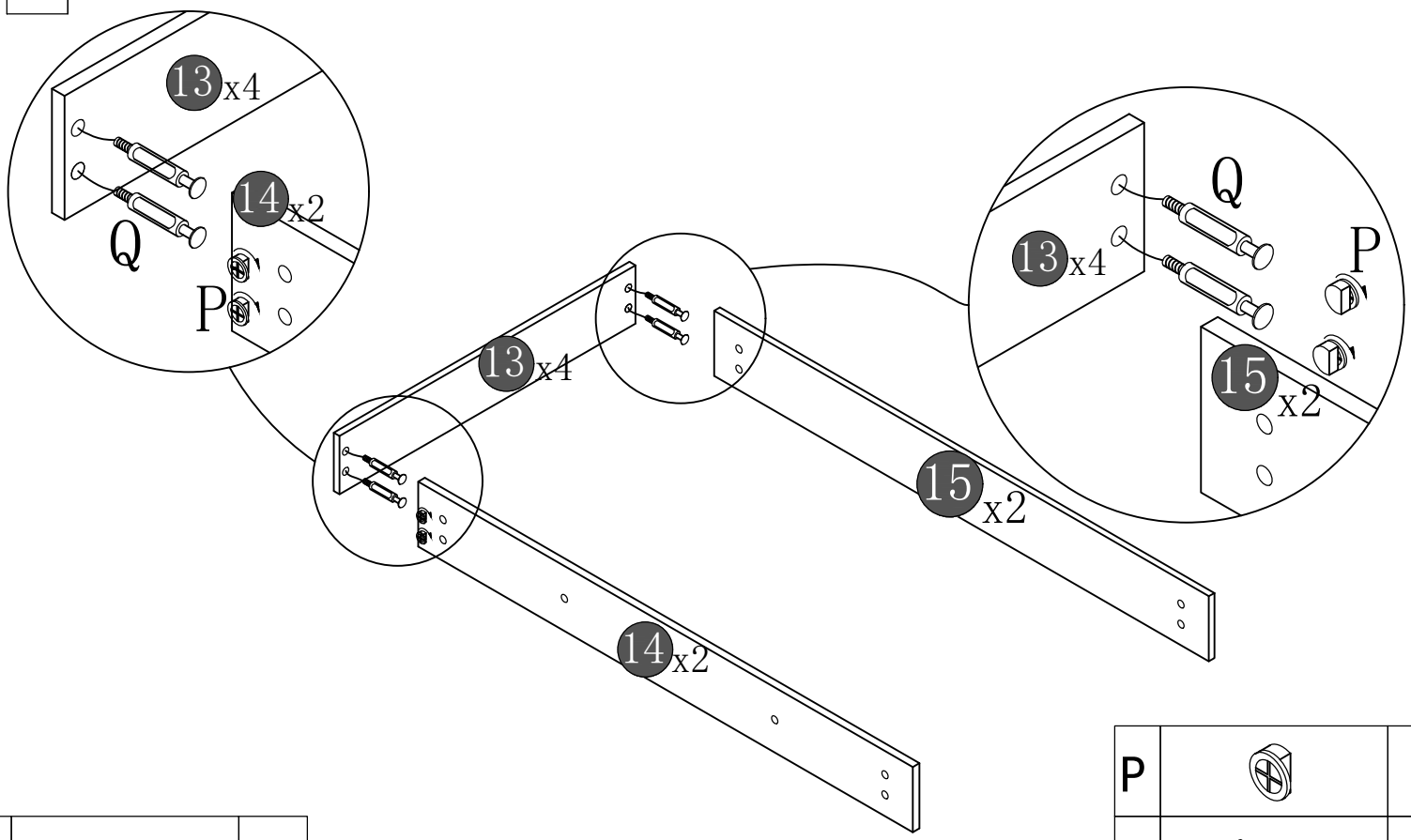

S		1	P		8
			Q		8

11

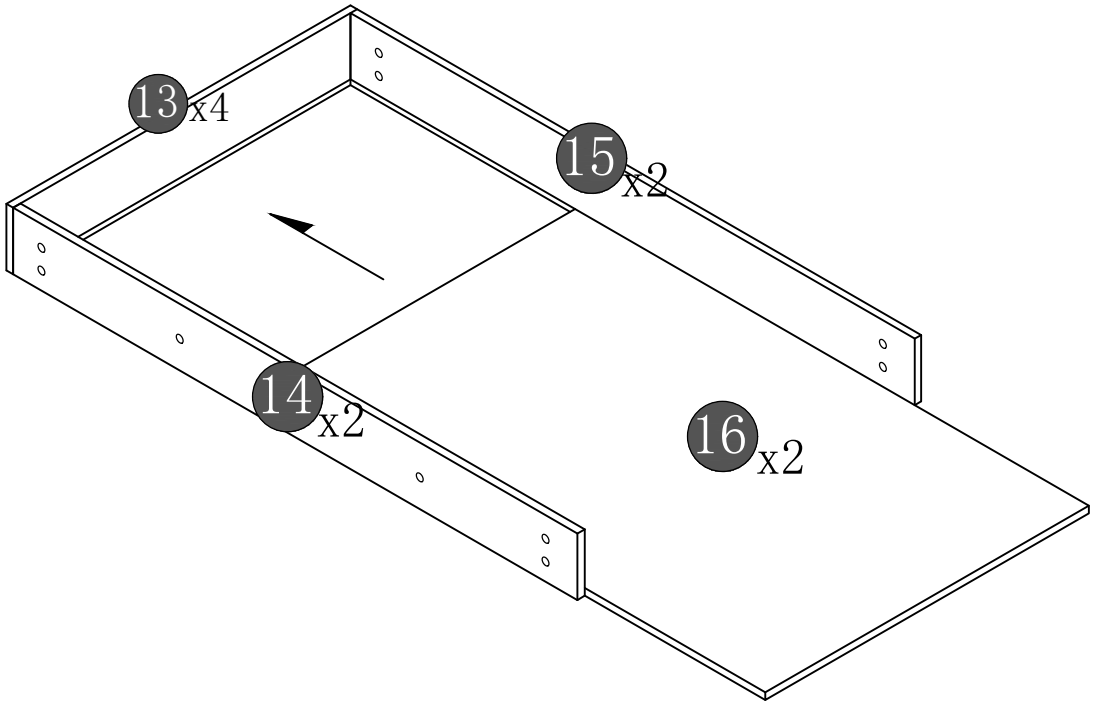

12

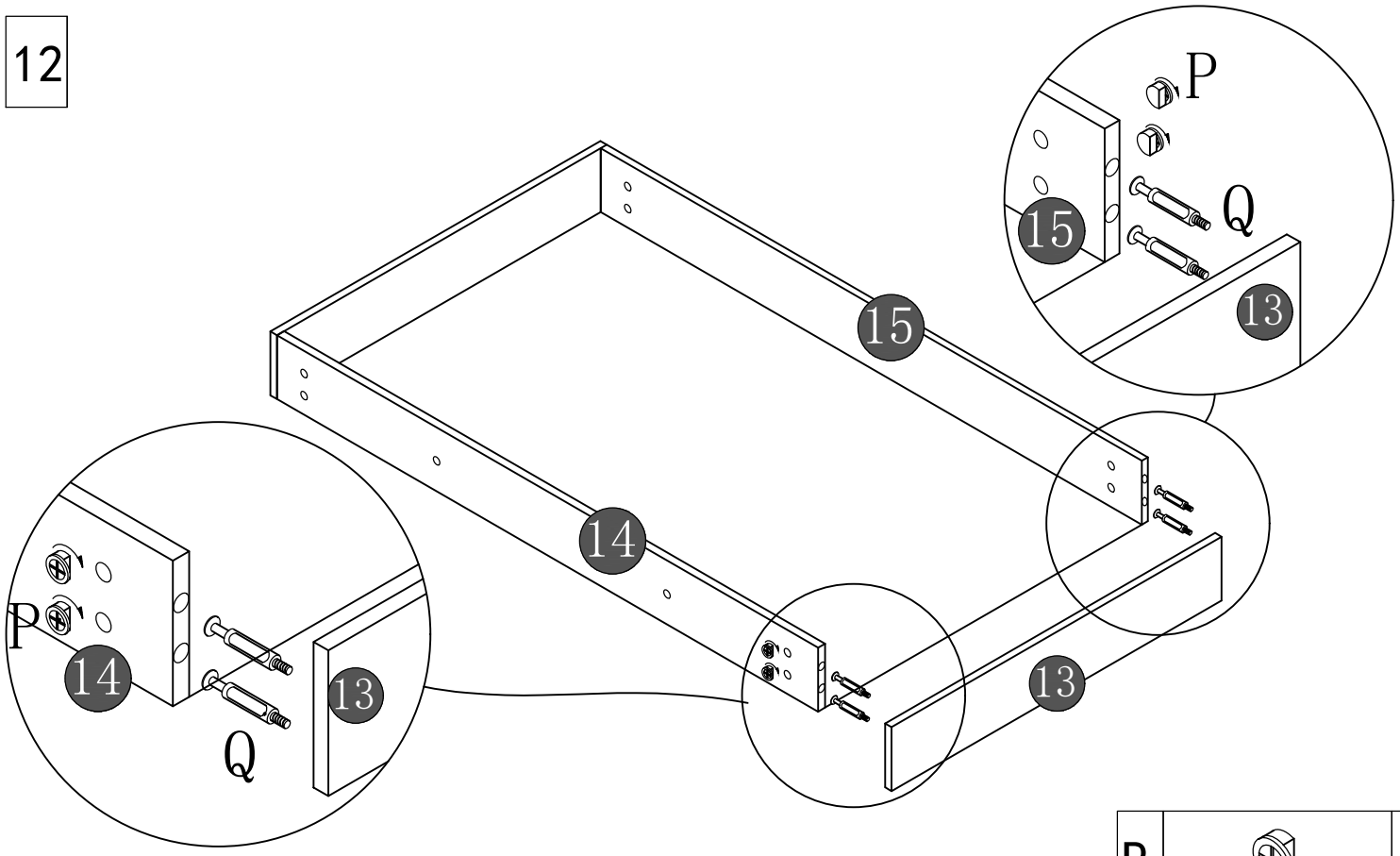

P		08
Q		08

S		1

13

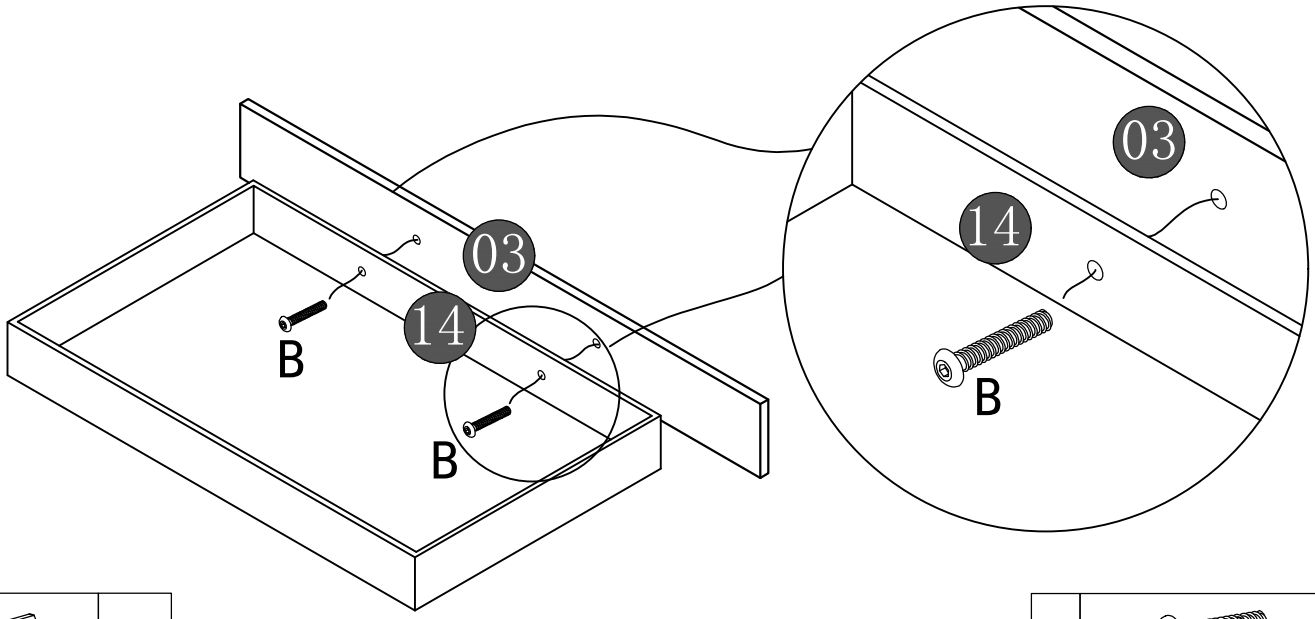

T	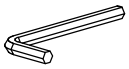	1	B	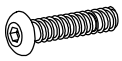 8*35	04

14

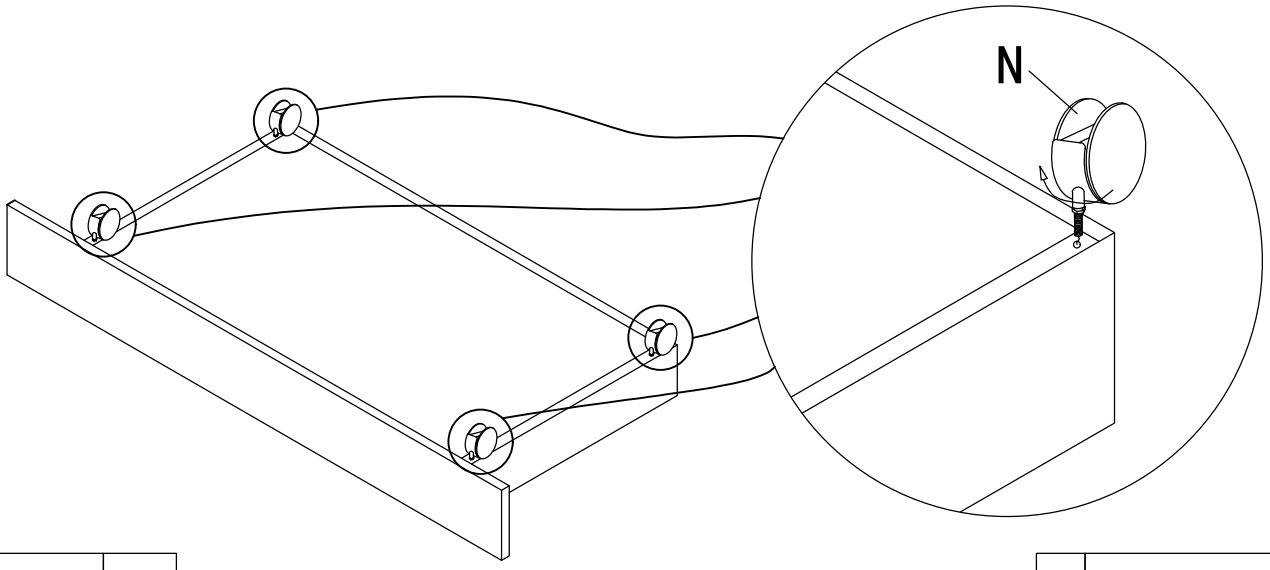

R	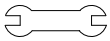	1	N	1. 5	08
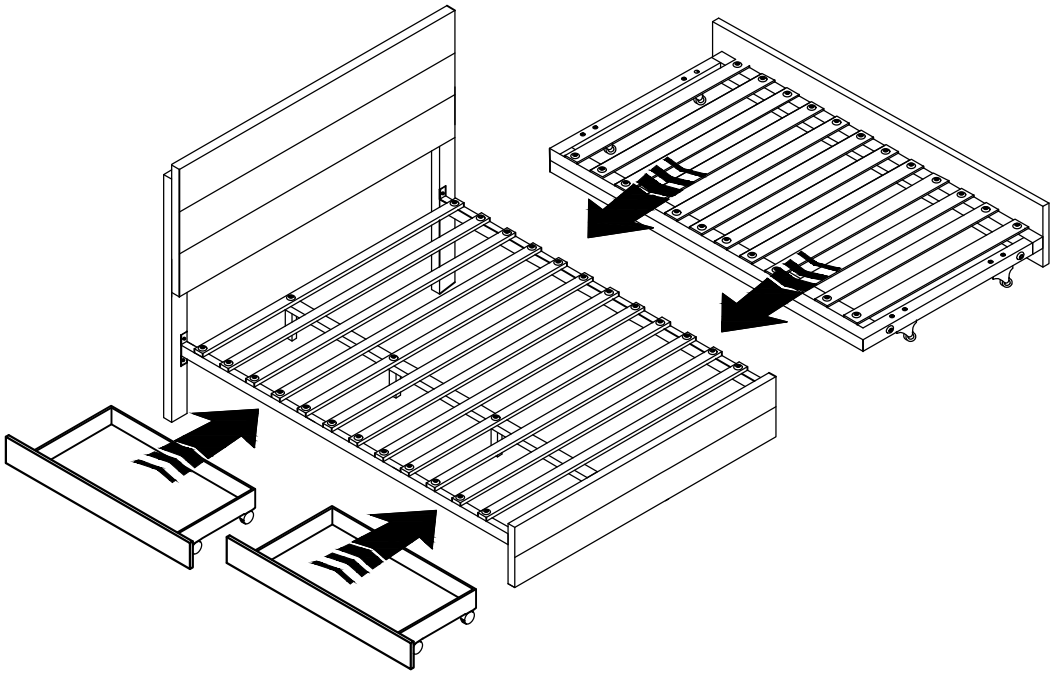
15