LOW Units

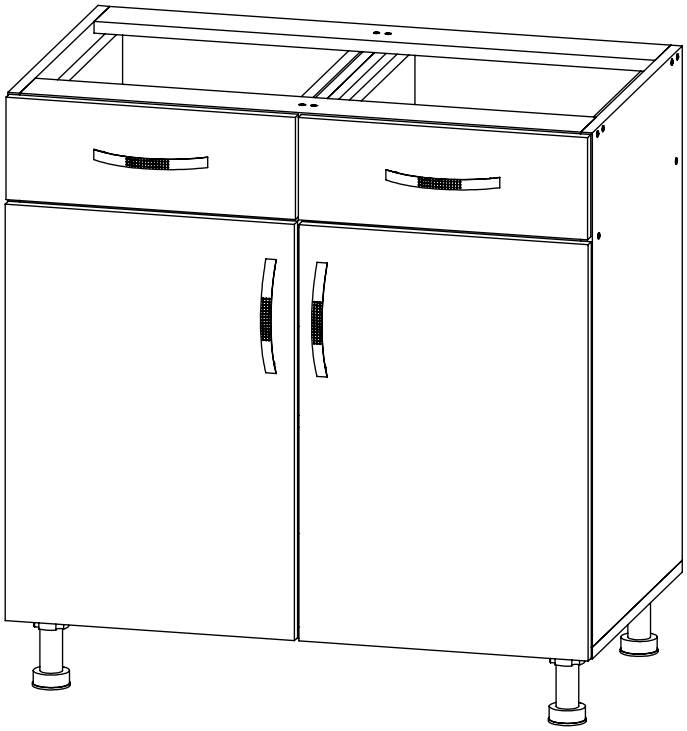

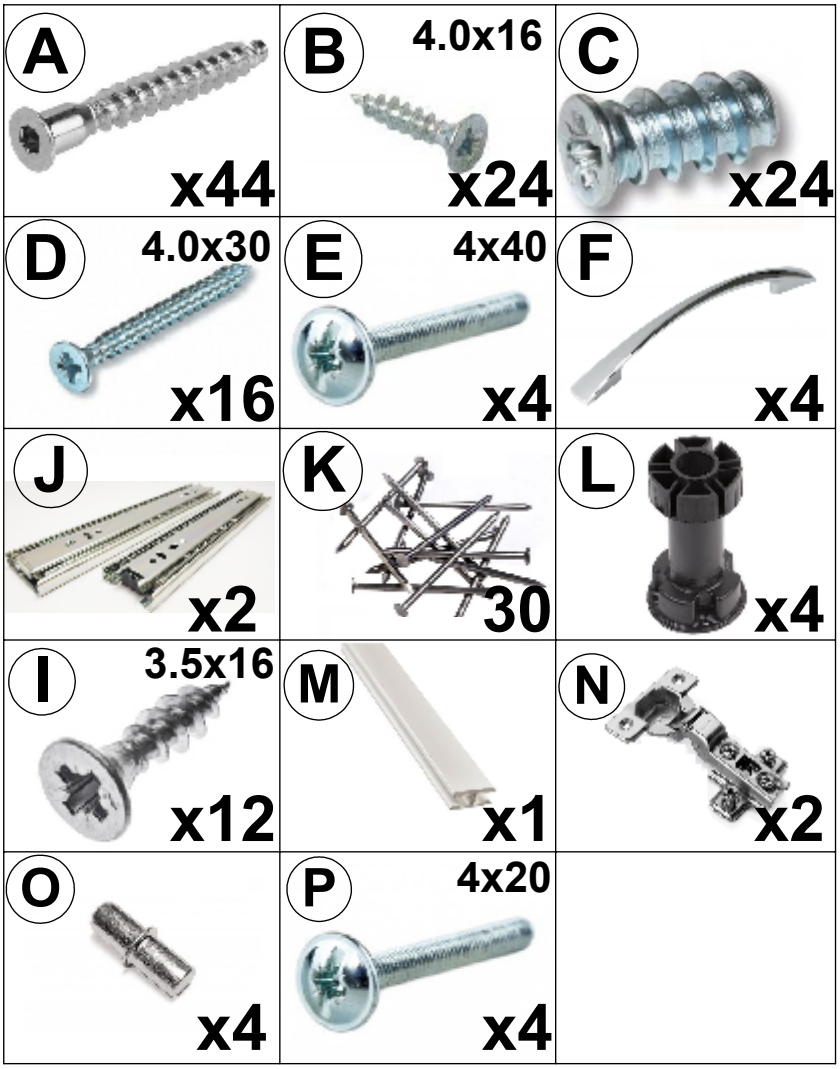

№	НЯД(2+2) 80/82	X
①	704x460	1
②	704x460	1
③	800x460	1
④	768x80	2
⑤	714x398	2
⑥	308x100	4
⑦	450x100	4
⑧	338x448	2
⑨	140x396	2
⑩	570x396	2
⑪	125x460	2
⑫	768x460	1
⑬	766x460	1

G40-KT-038-A

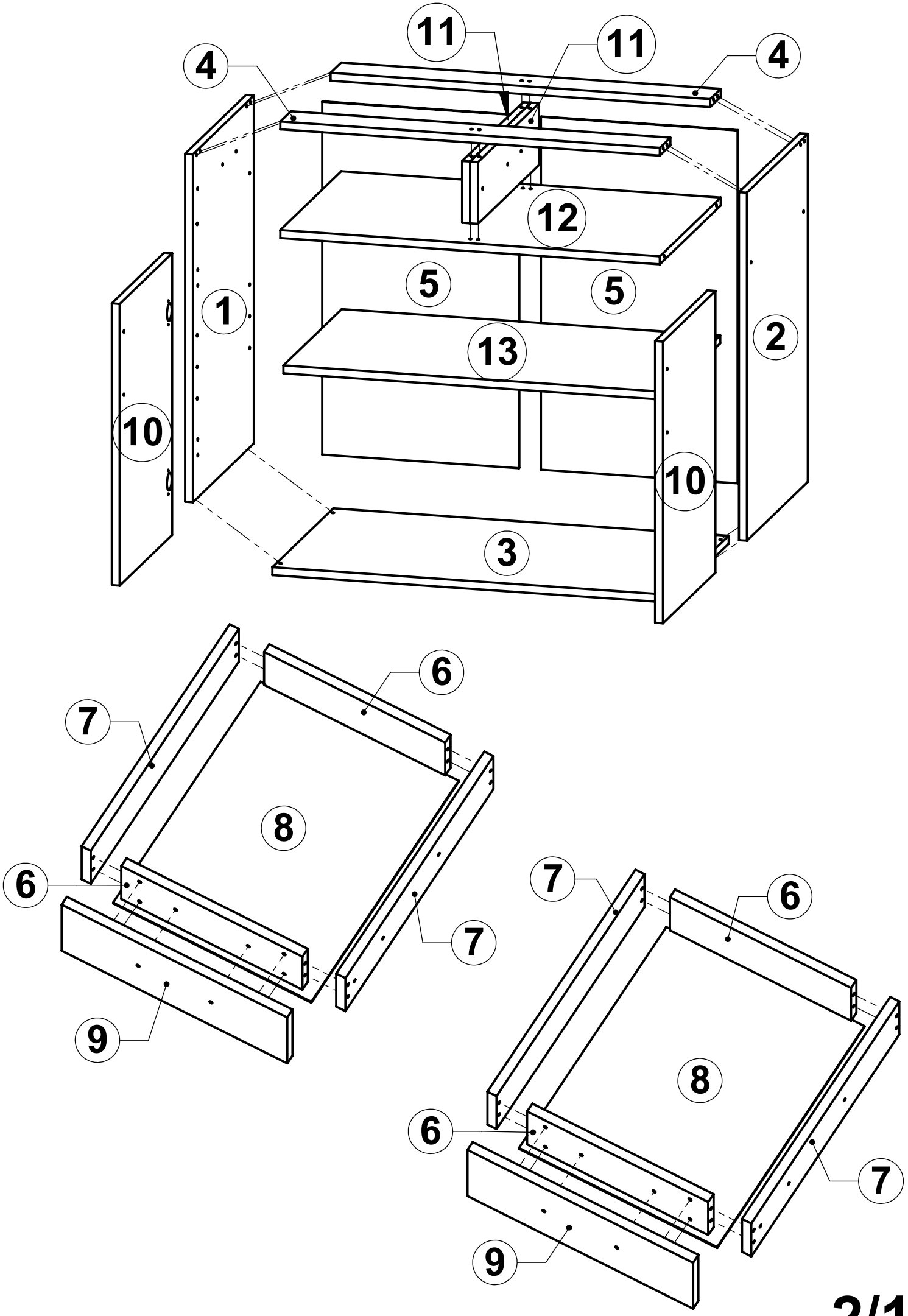
11
11
4
4
12
5
5
1
2
13
10
10
3
6
7
8
6
7
9
7
6
8
6
7
9

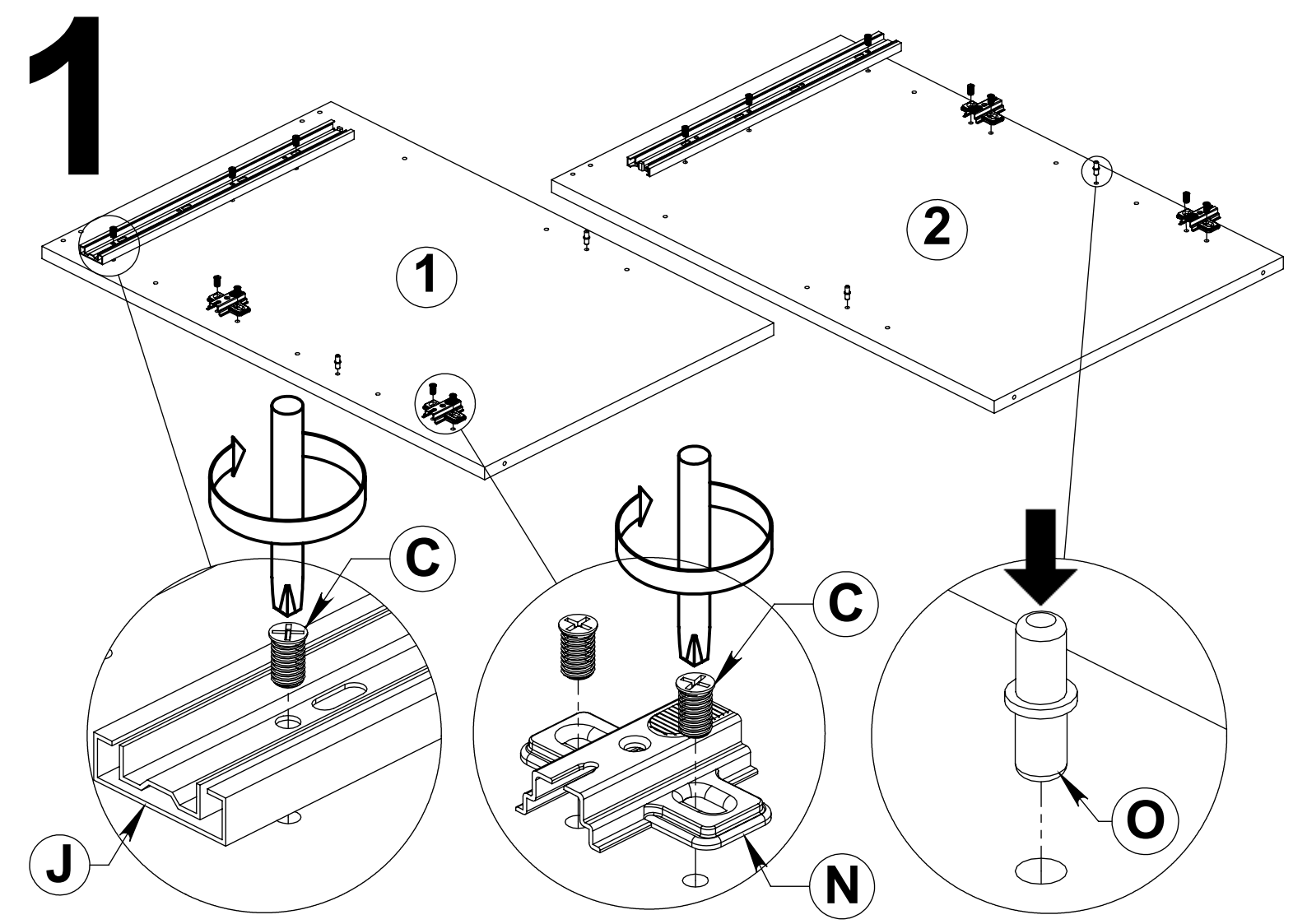
1
1
2
C
C
J
N
O

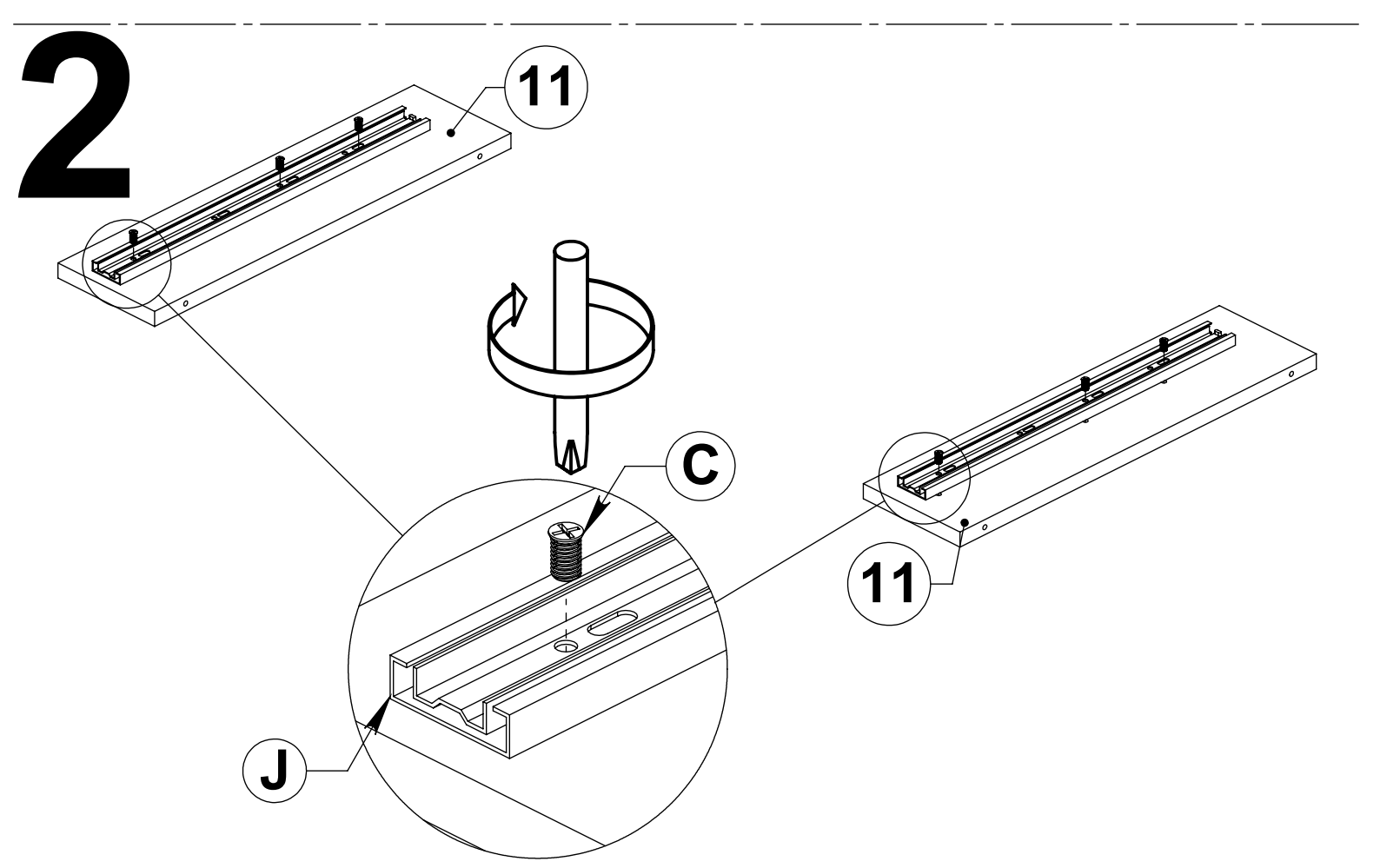
2
11
C
J
11

3

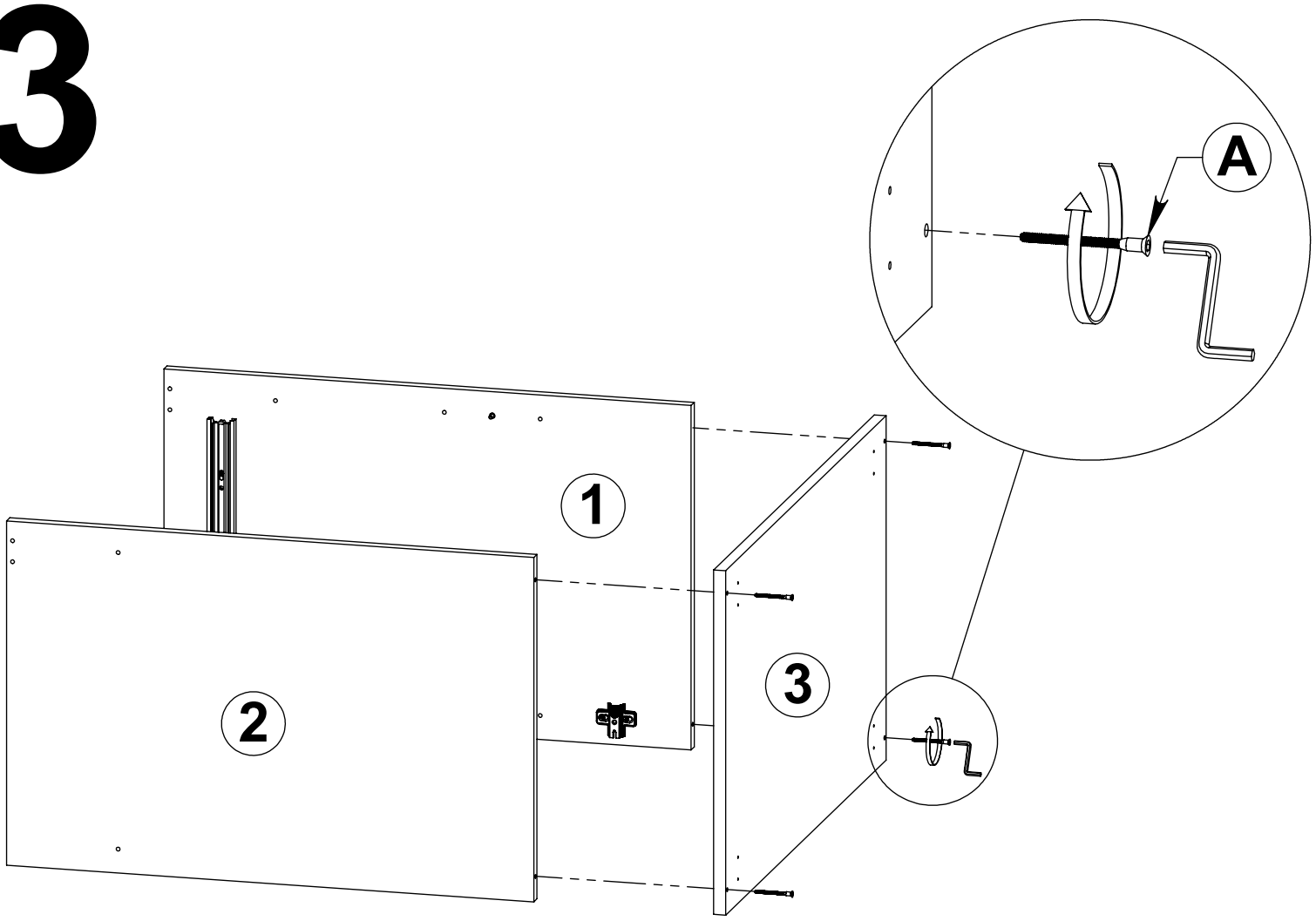

4

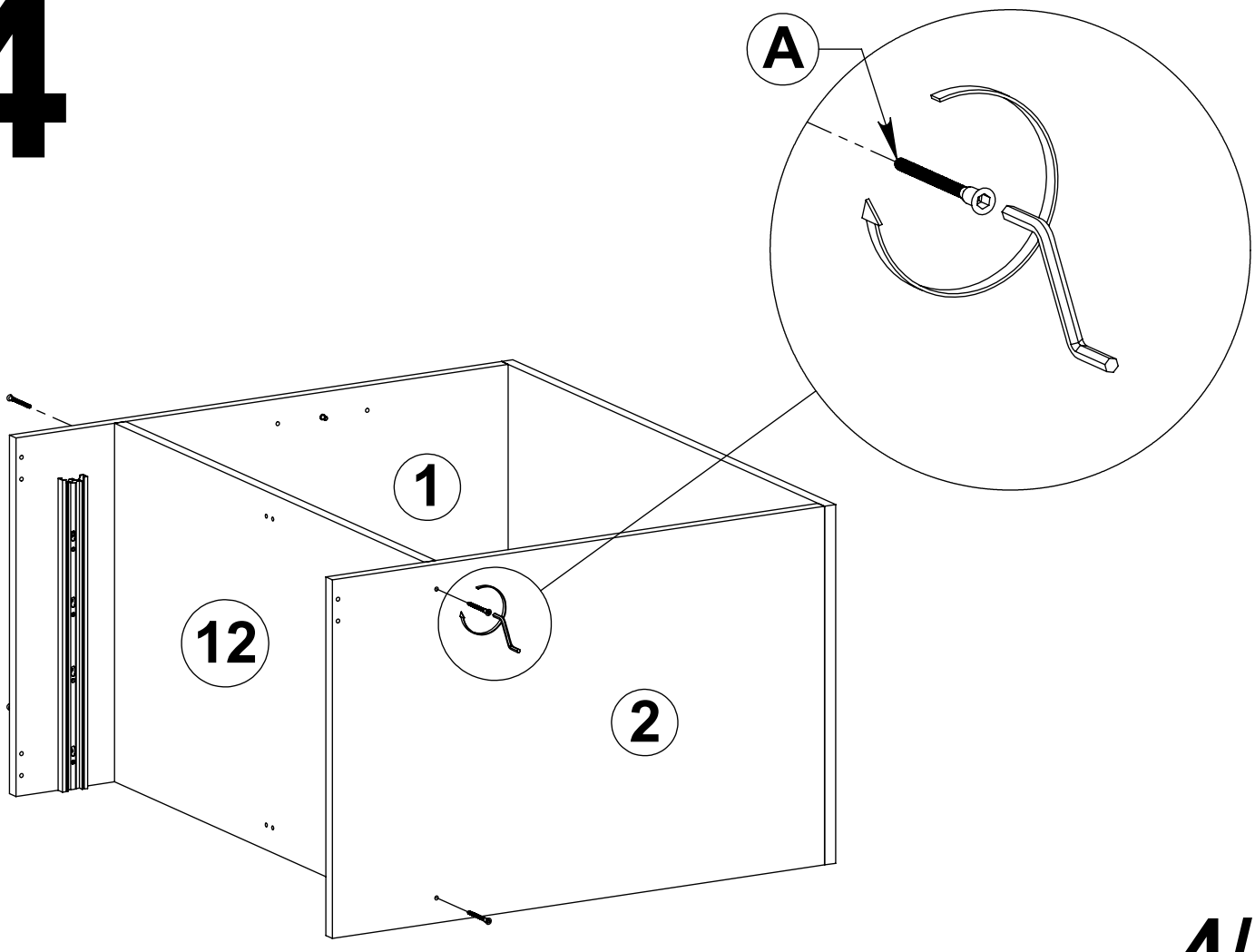

5

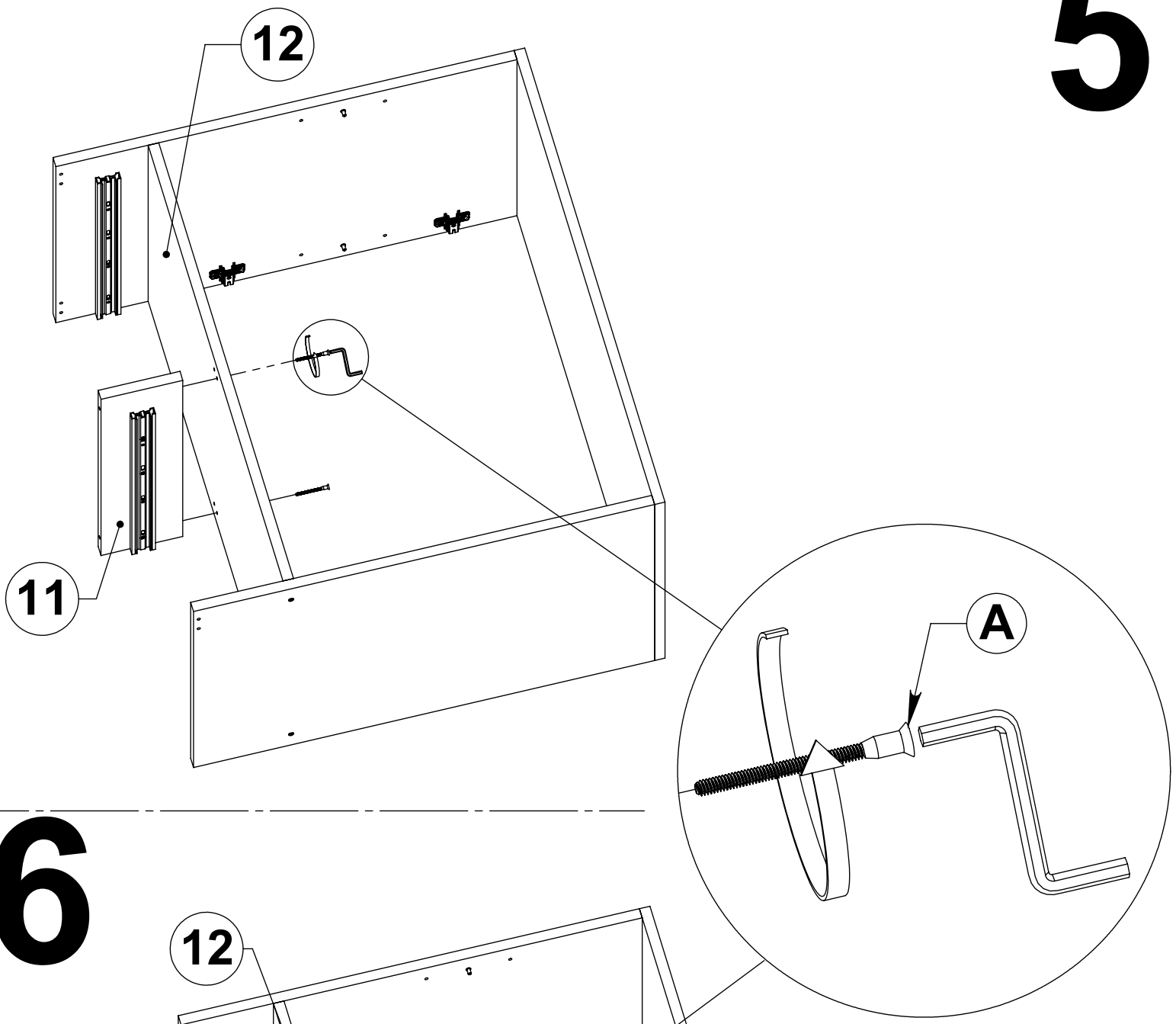

6

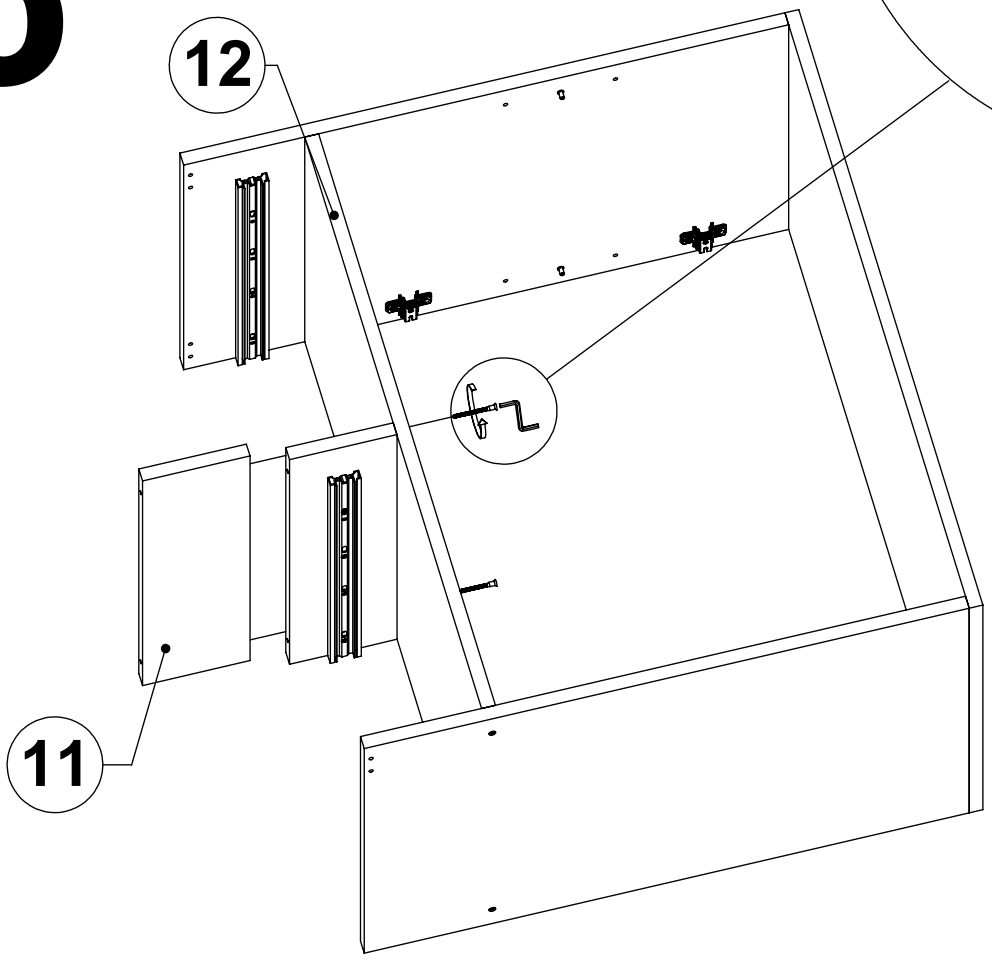

7

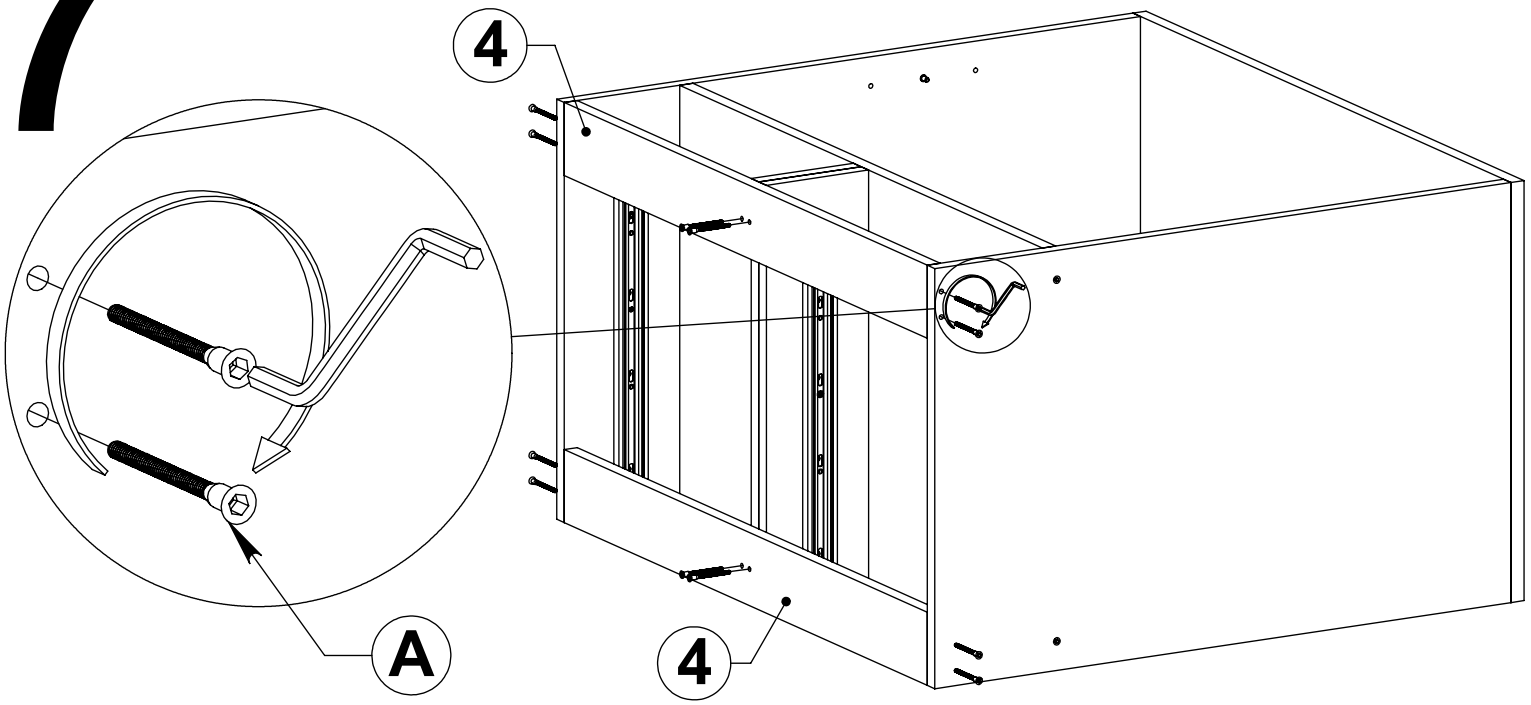

8

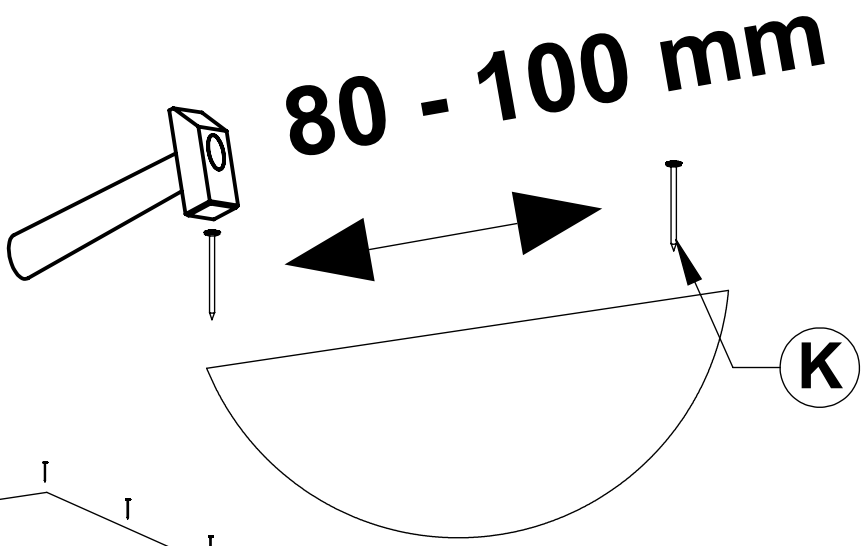

a = b

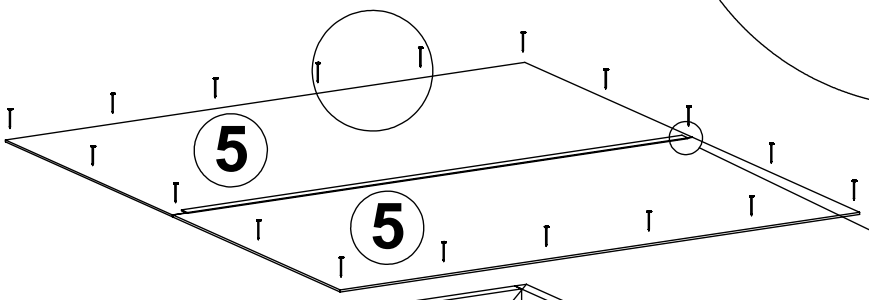

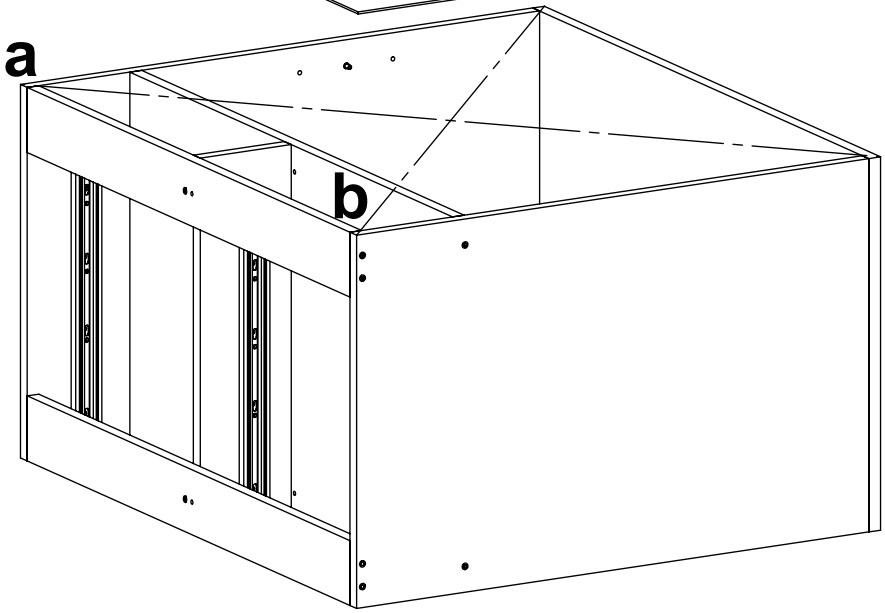

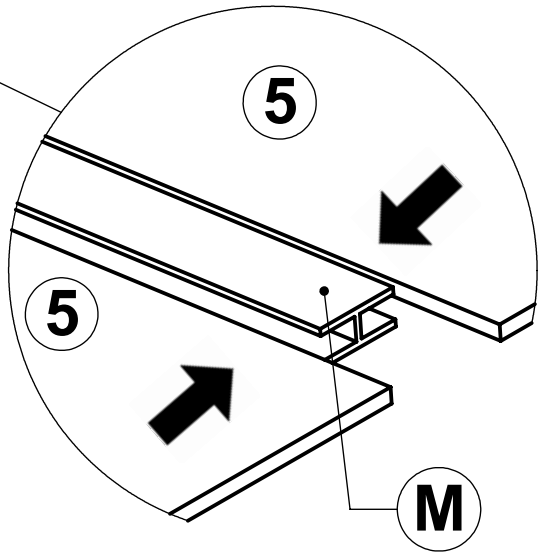

9

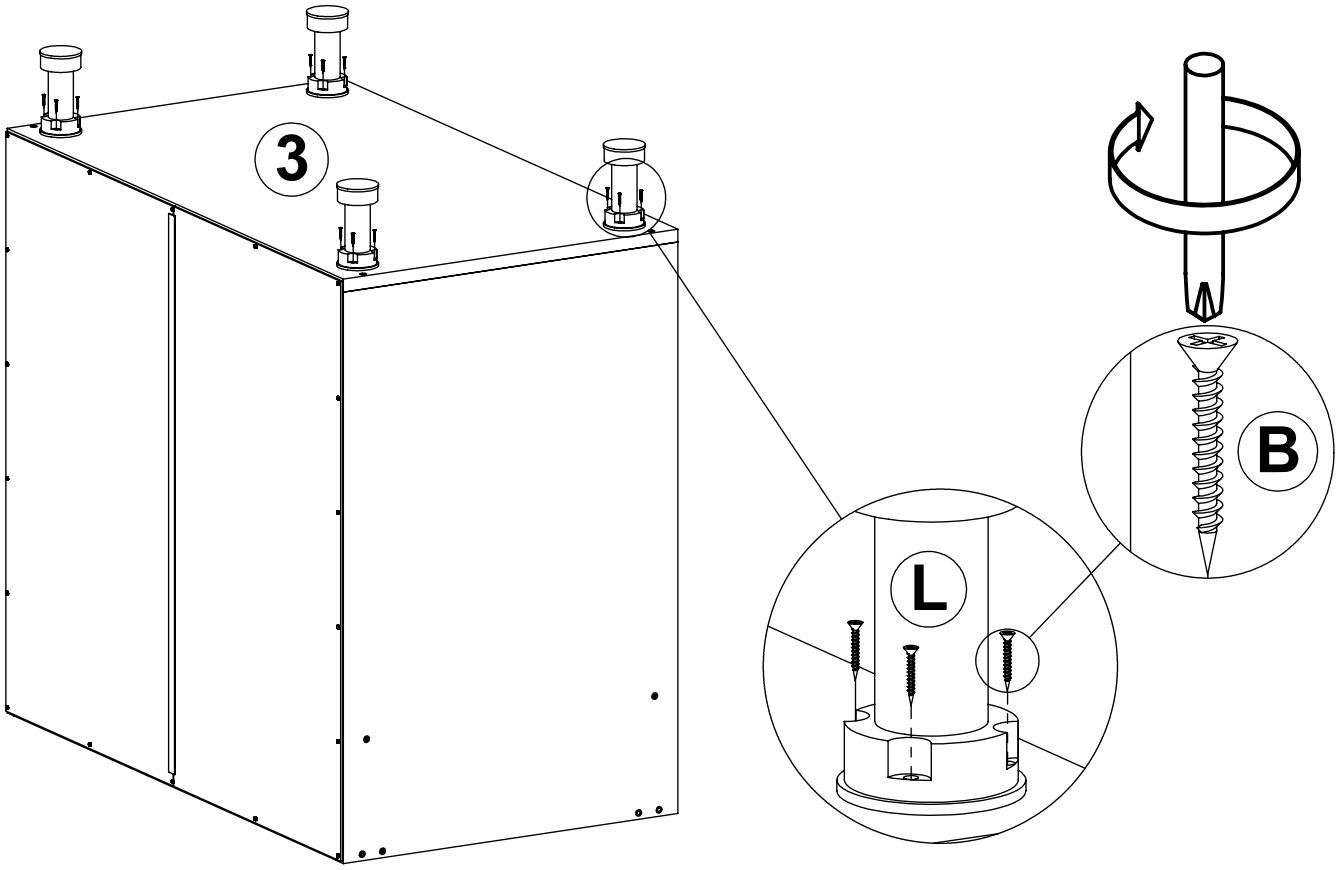

10

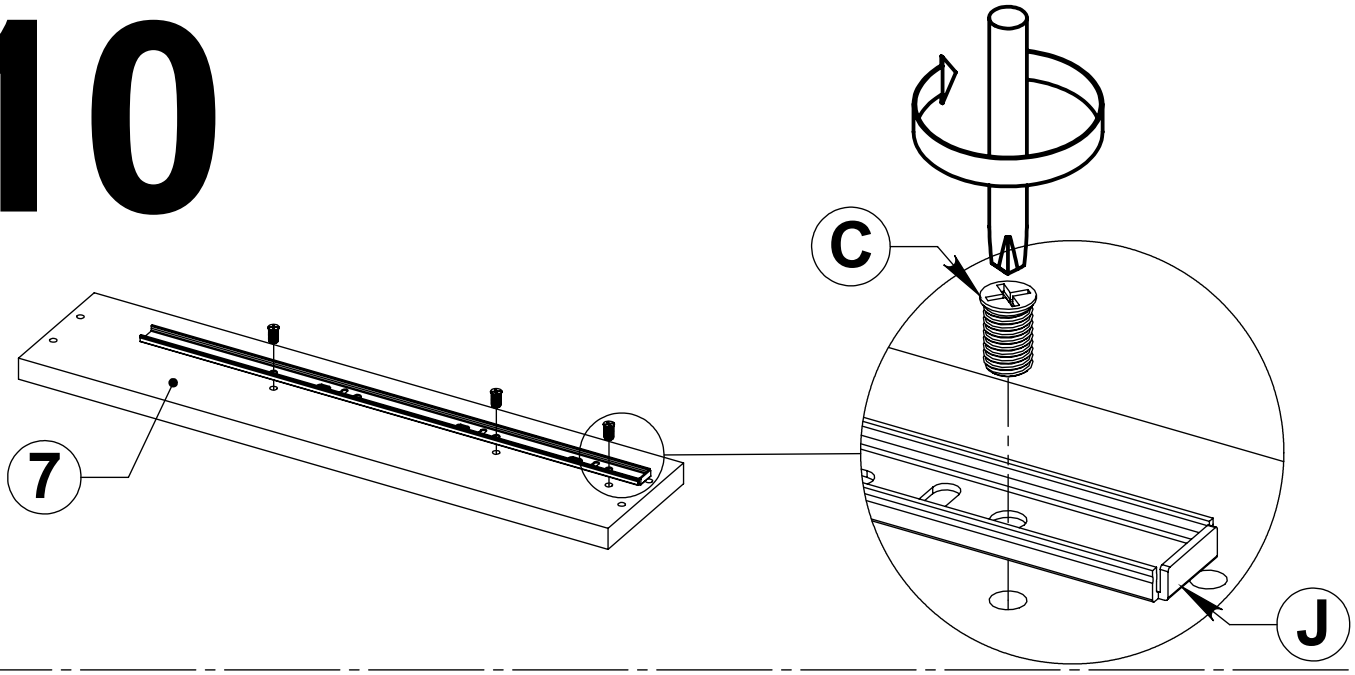

11

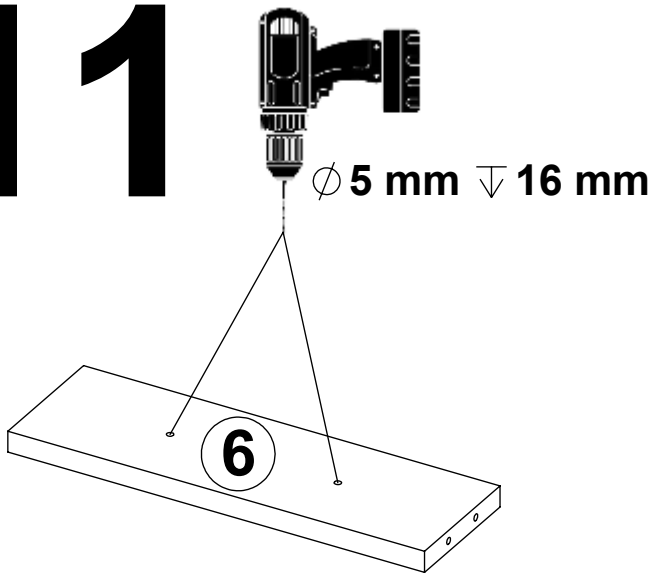

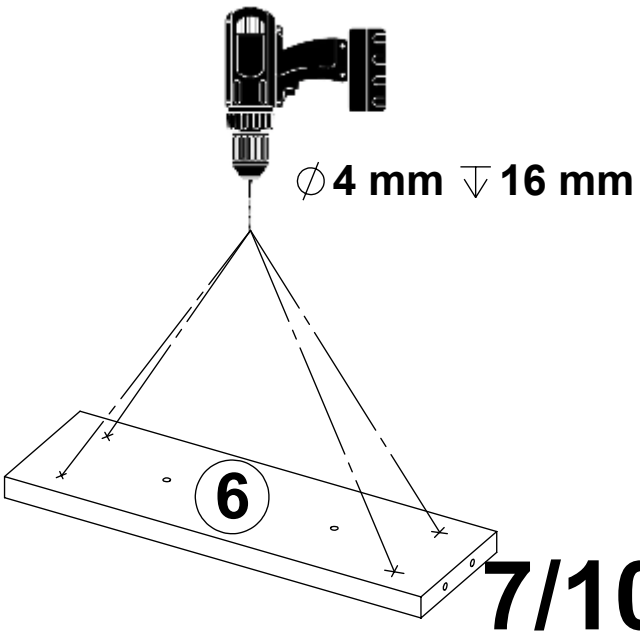

12

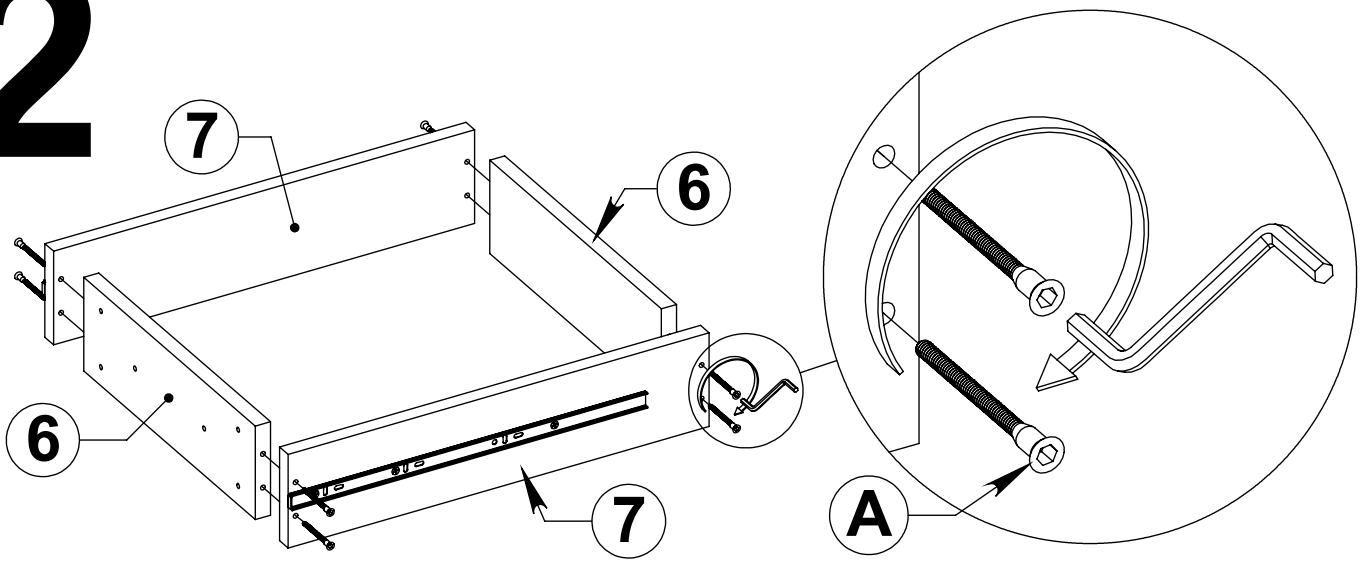

13

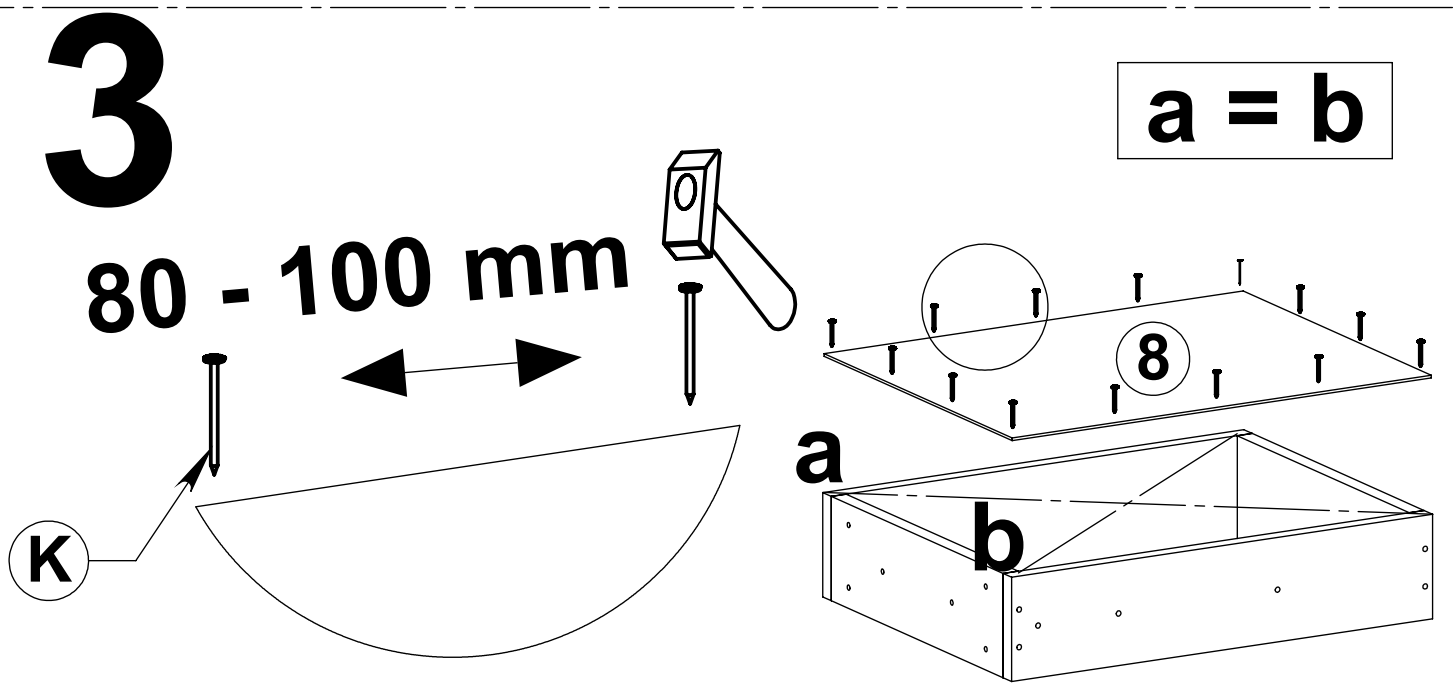

14

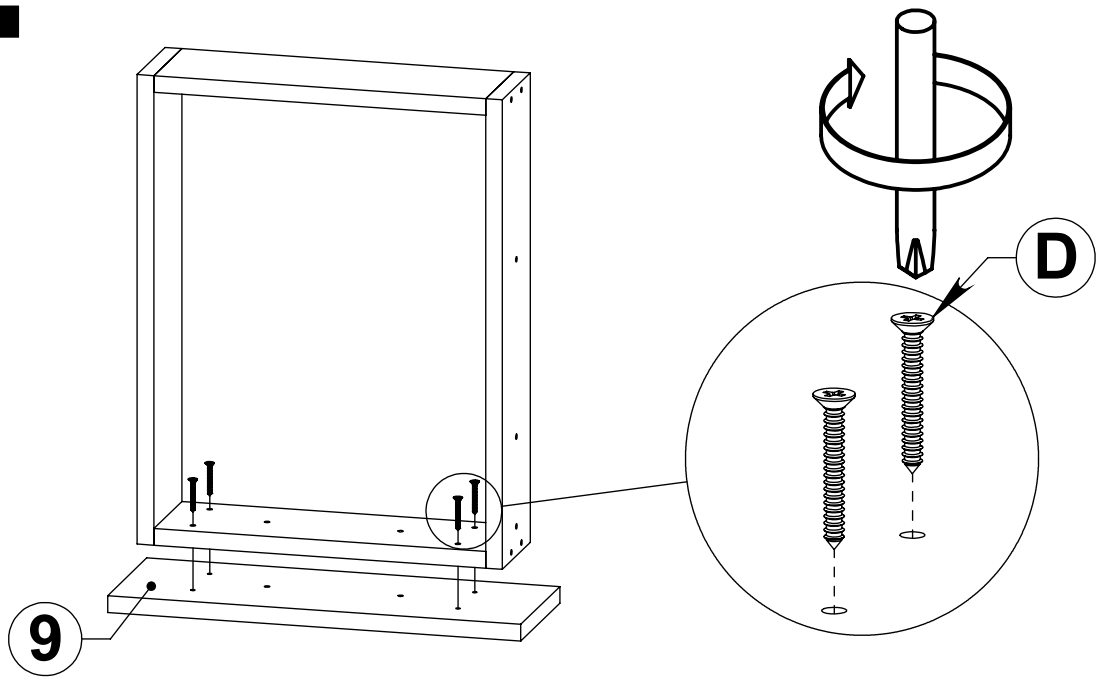

15

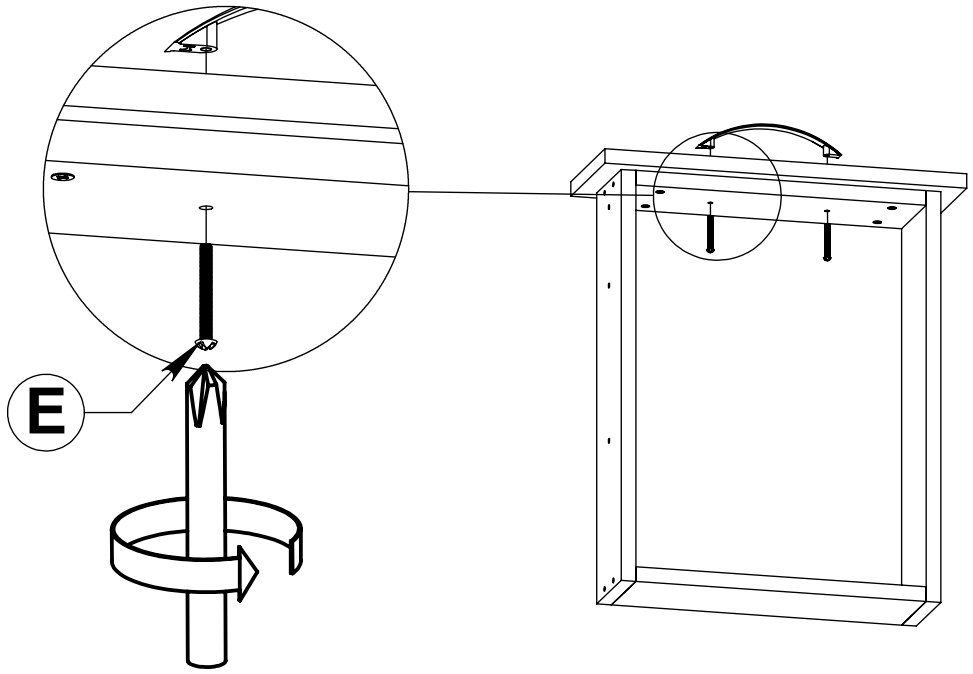

16

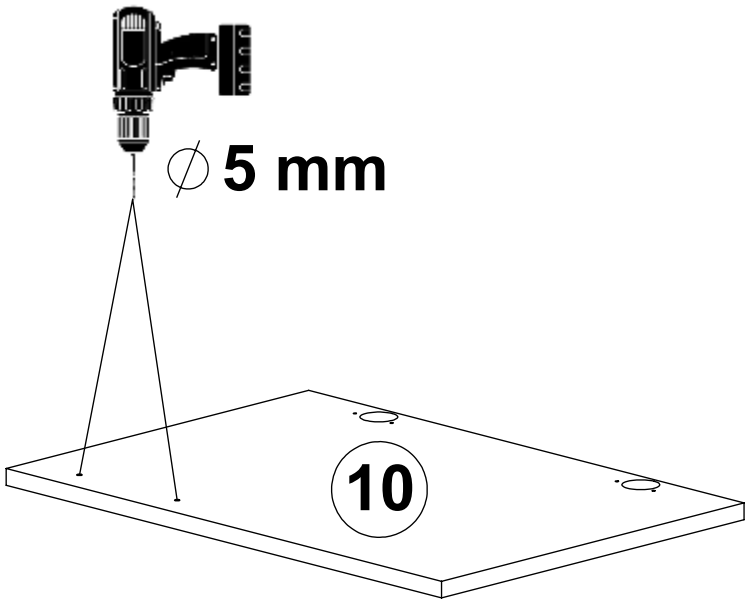

17

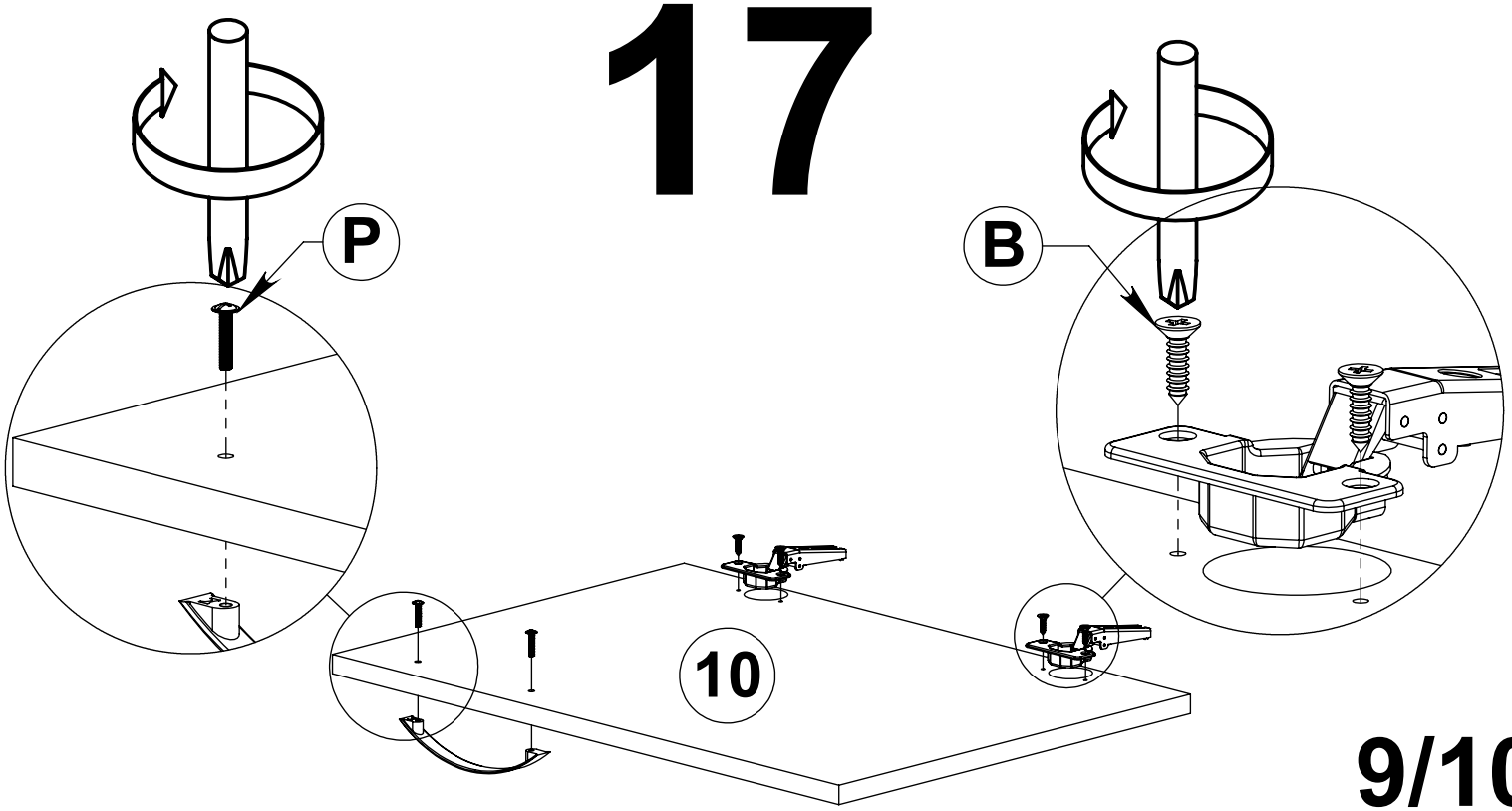

18

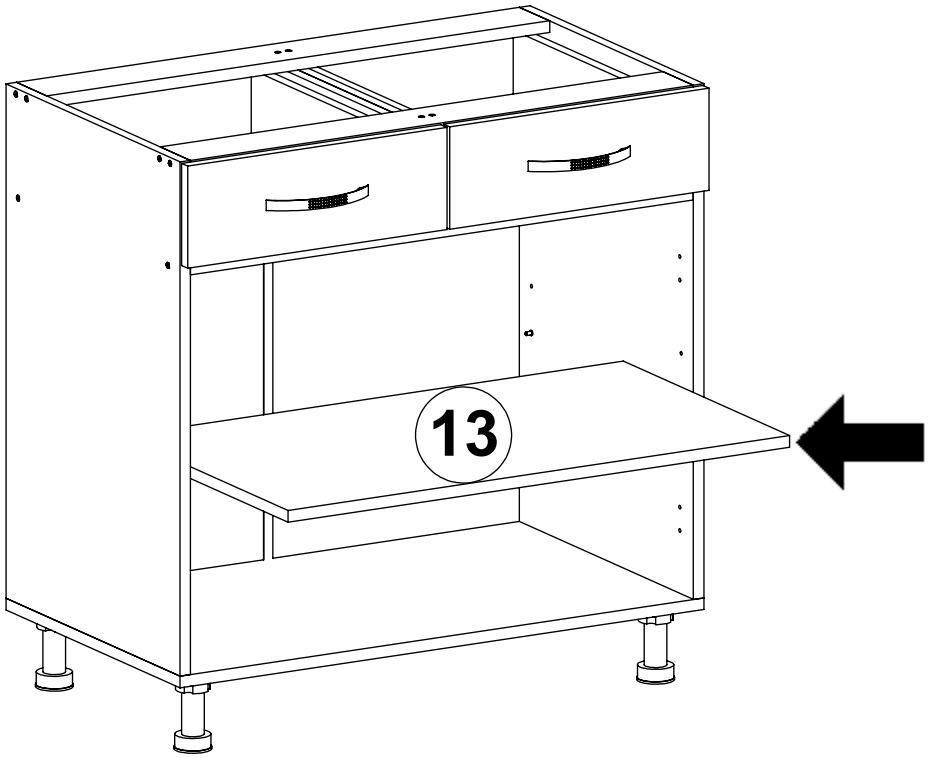
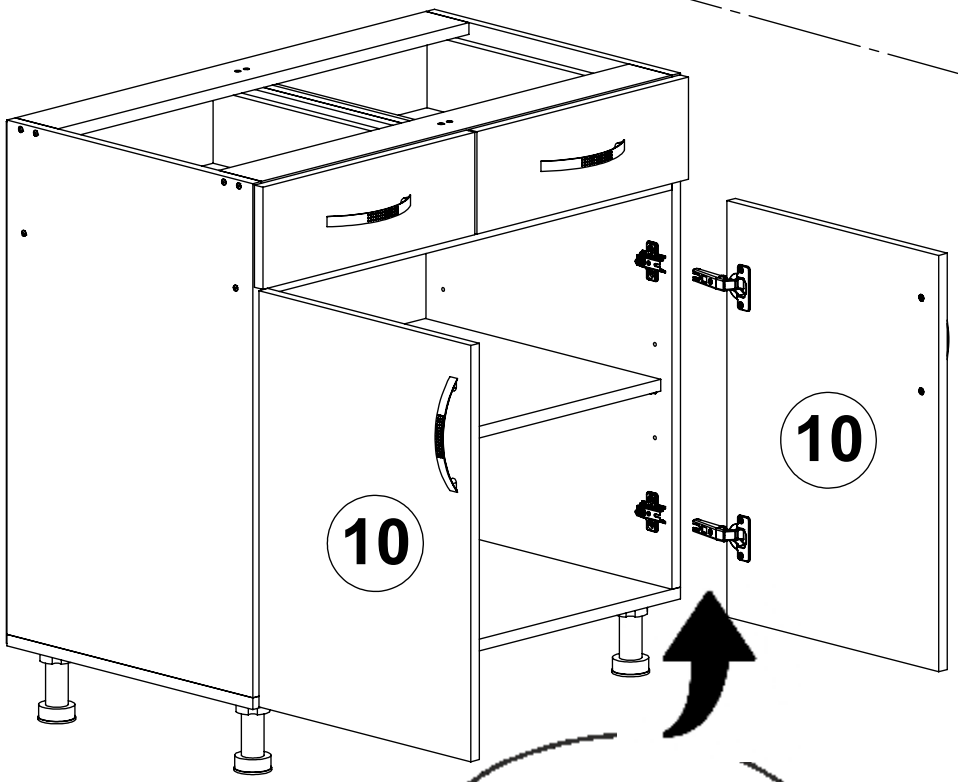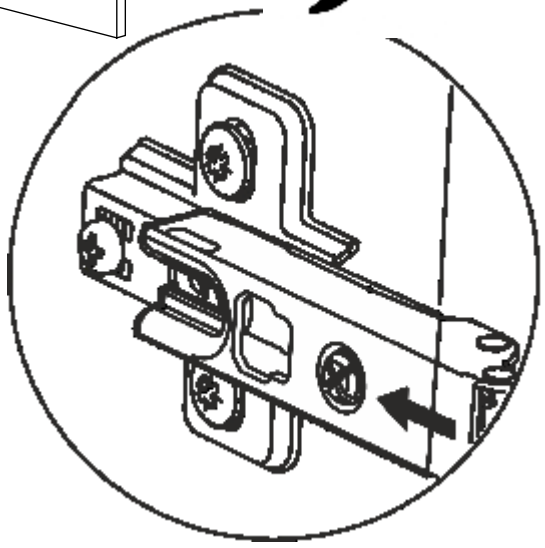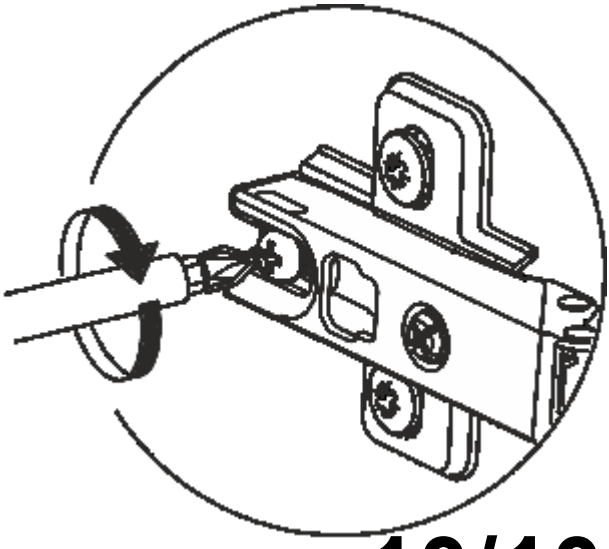
19