LOW Units

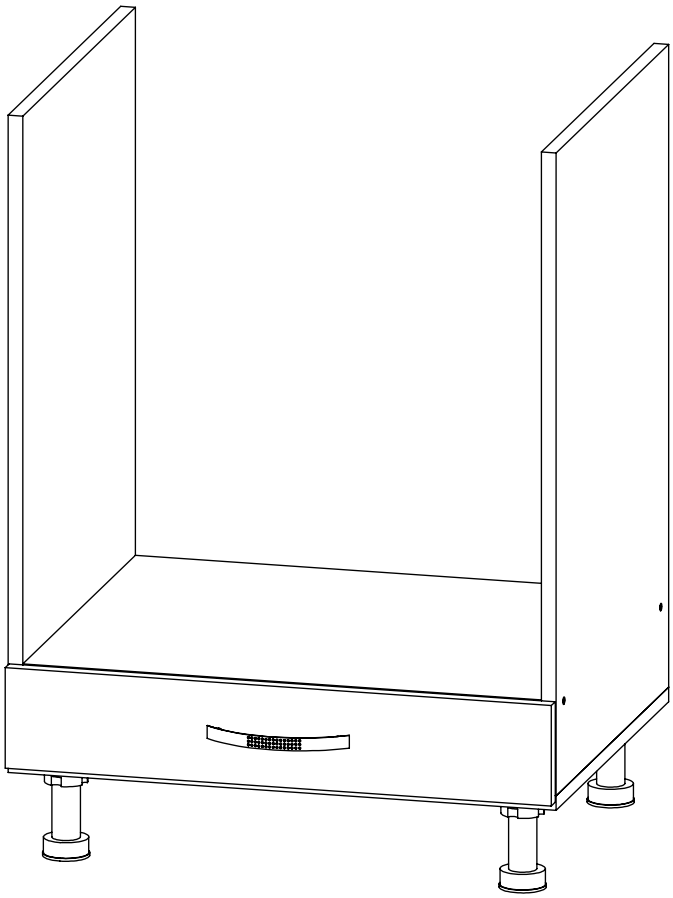

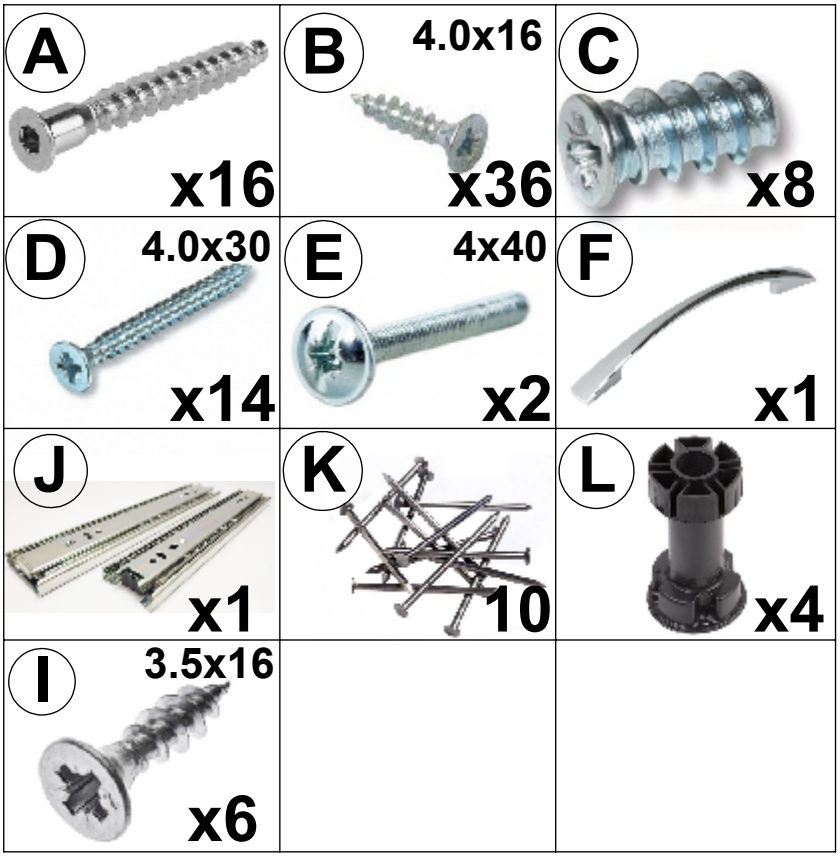

№	НД 60/82	X
1	704x460	1
2	704x460	1
3	600x460	1
4	116x598	1
5	110x598	1
6	477x60	2
7	450x60	2
8	568x460	1
9	460x88	2
10	507x448	1

G40-KT-039-A

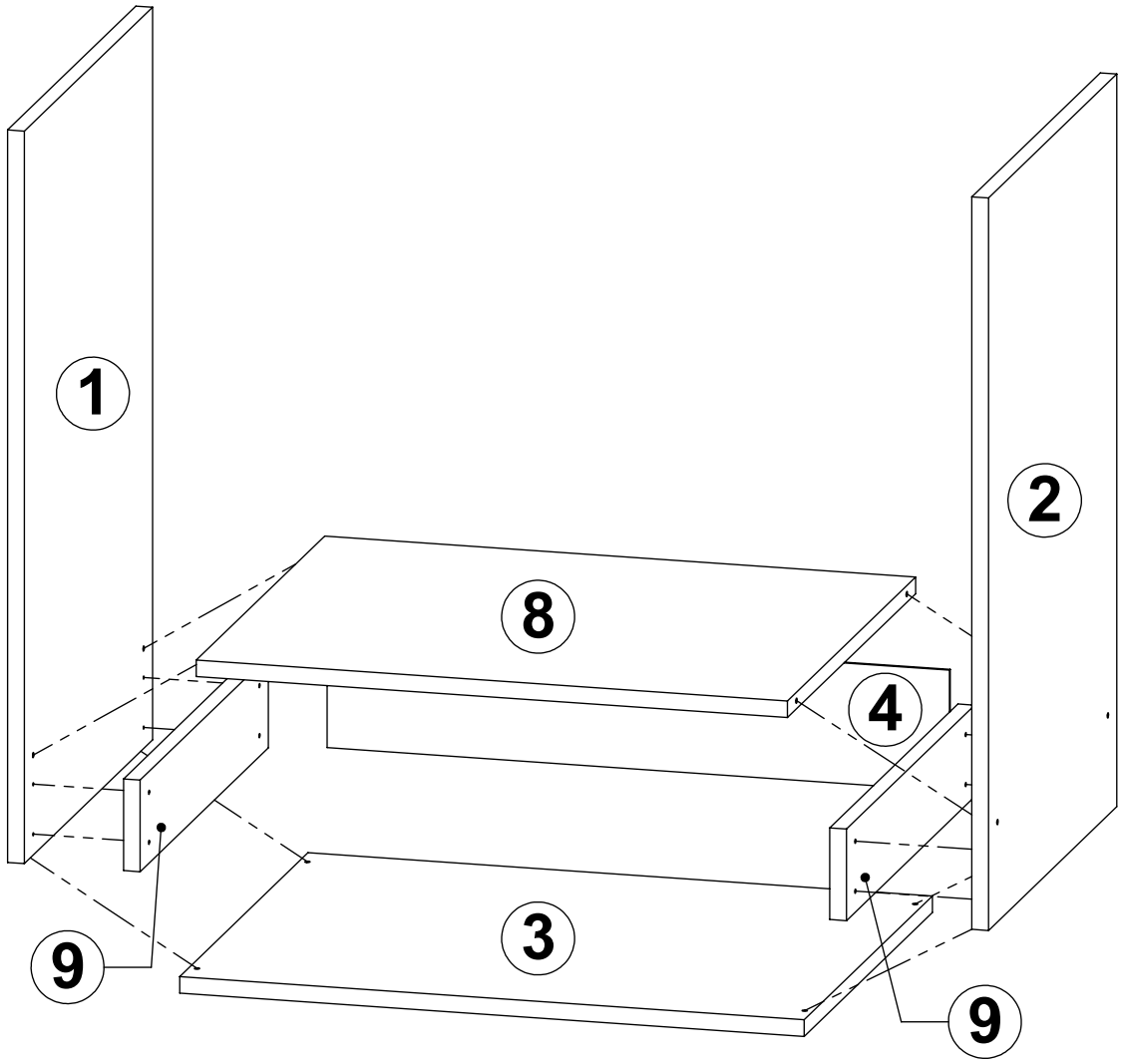
1
2
8
4
3
9
9

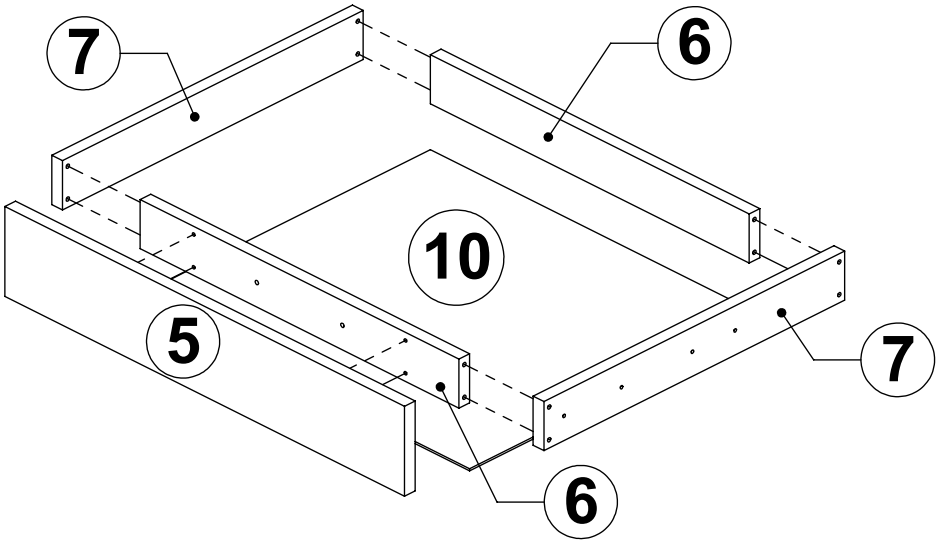
7
6
10
5
7
6

1

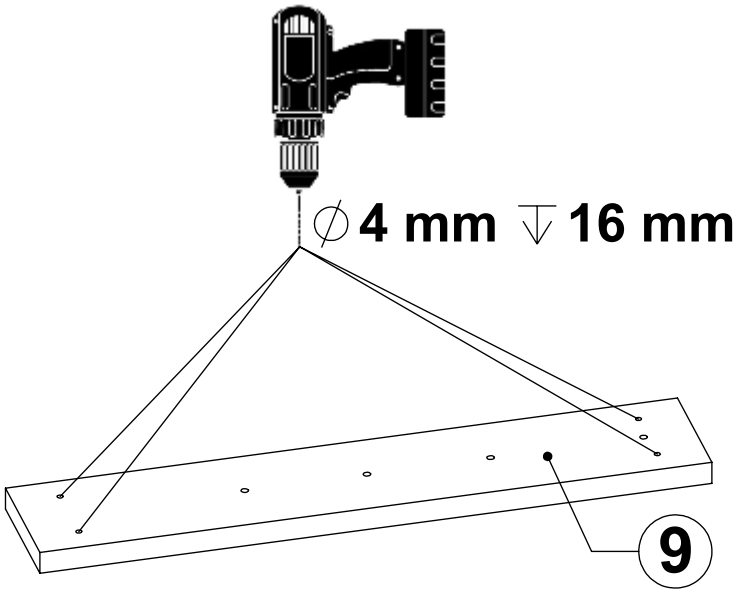

2

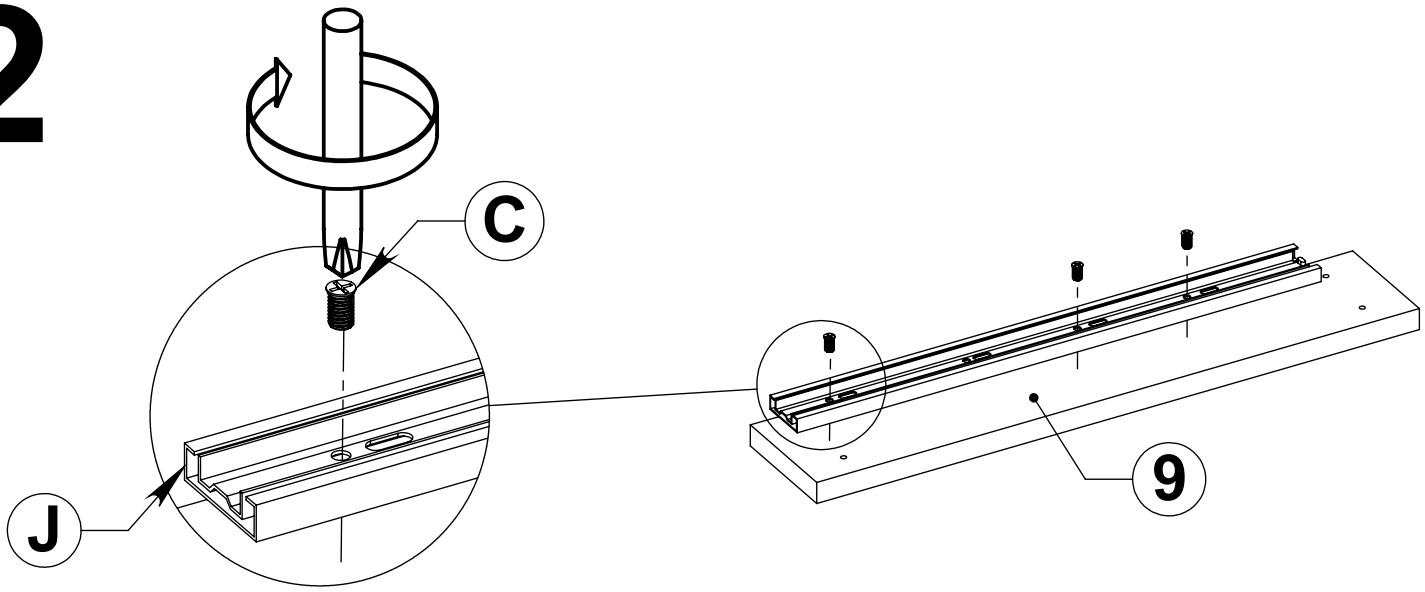

3

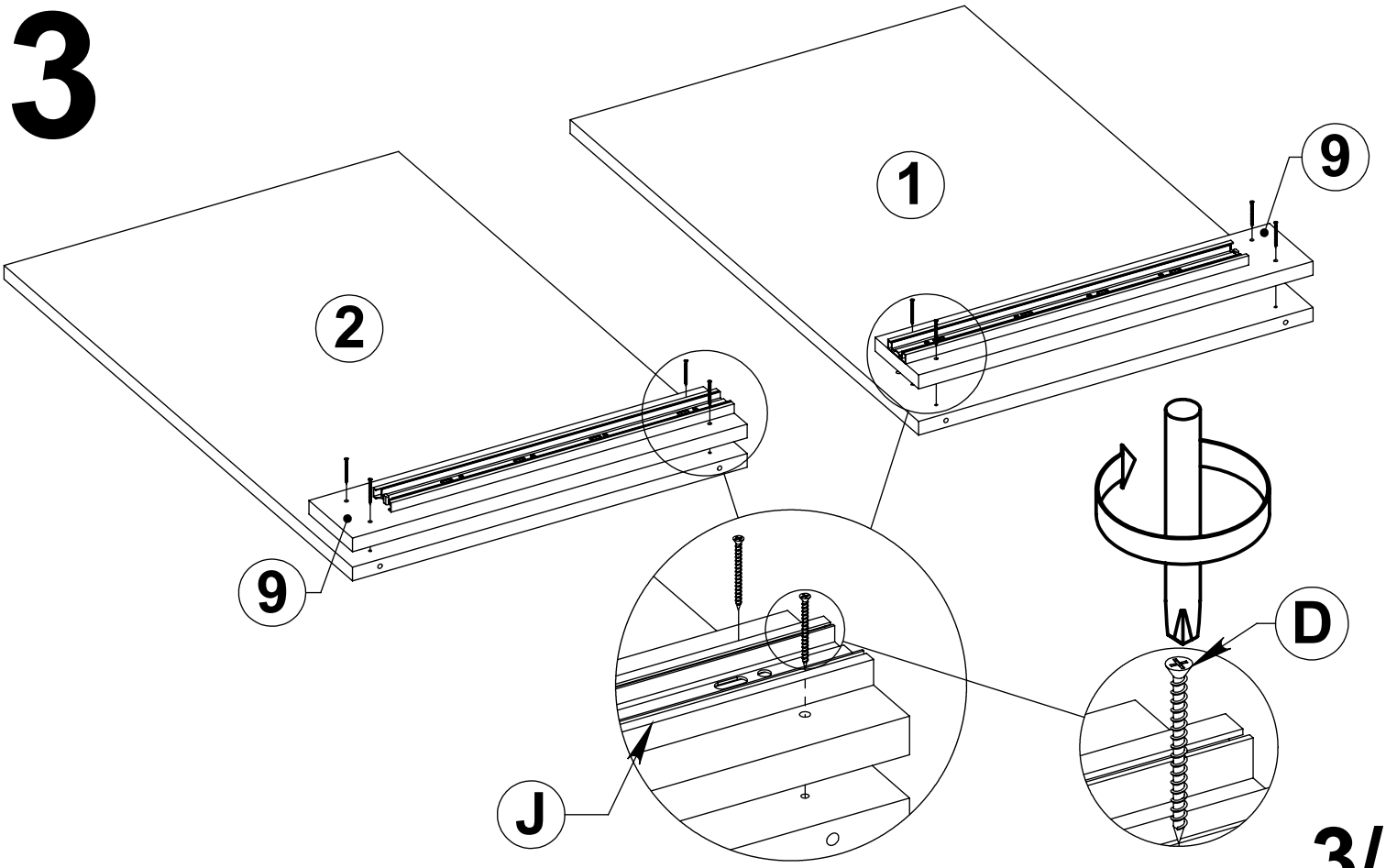

4

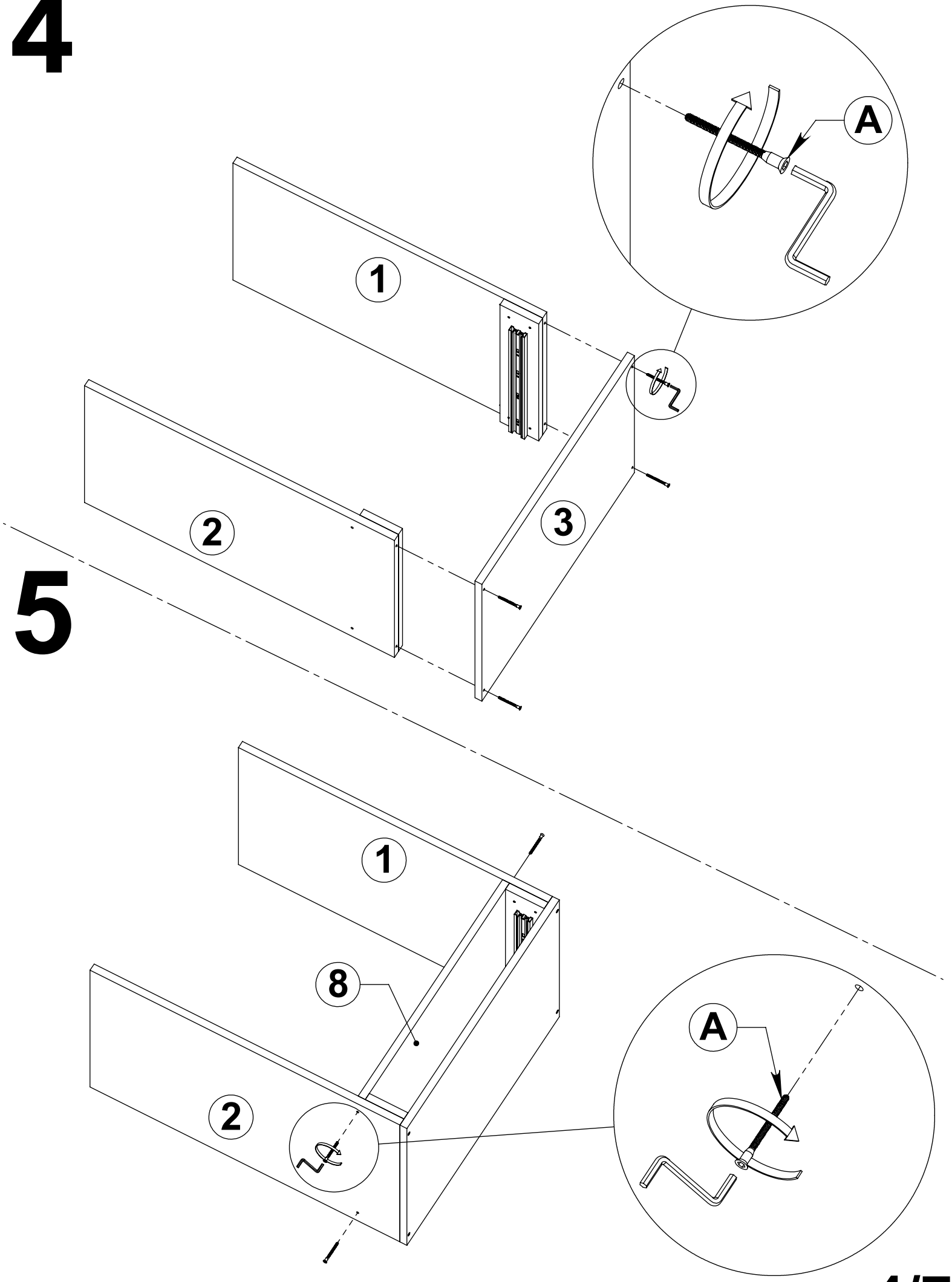

6

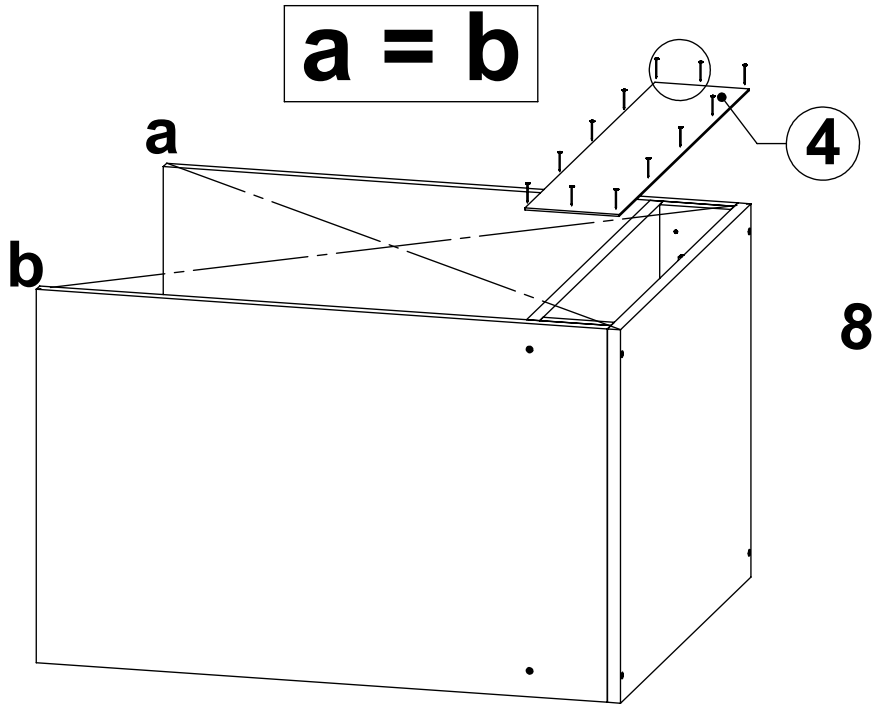

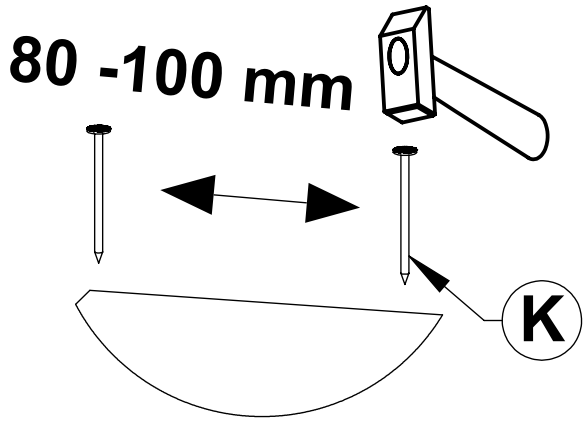

7

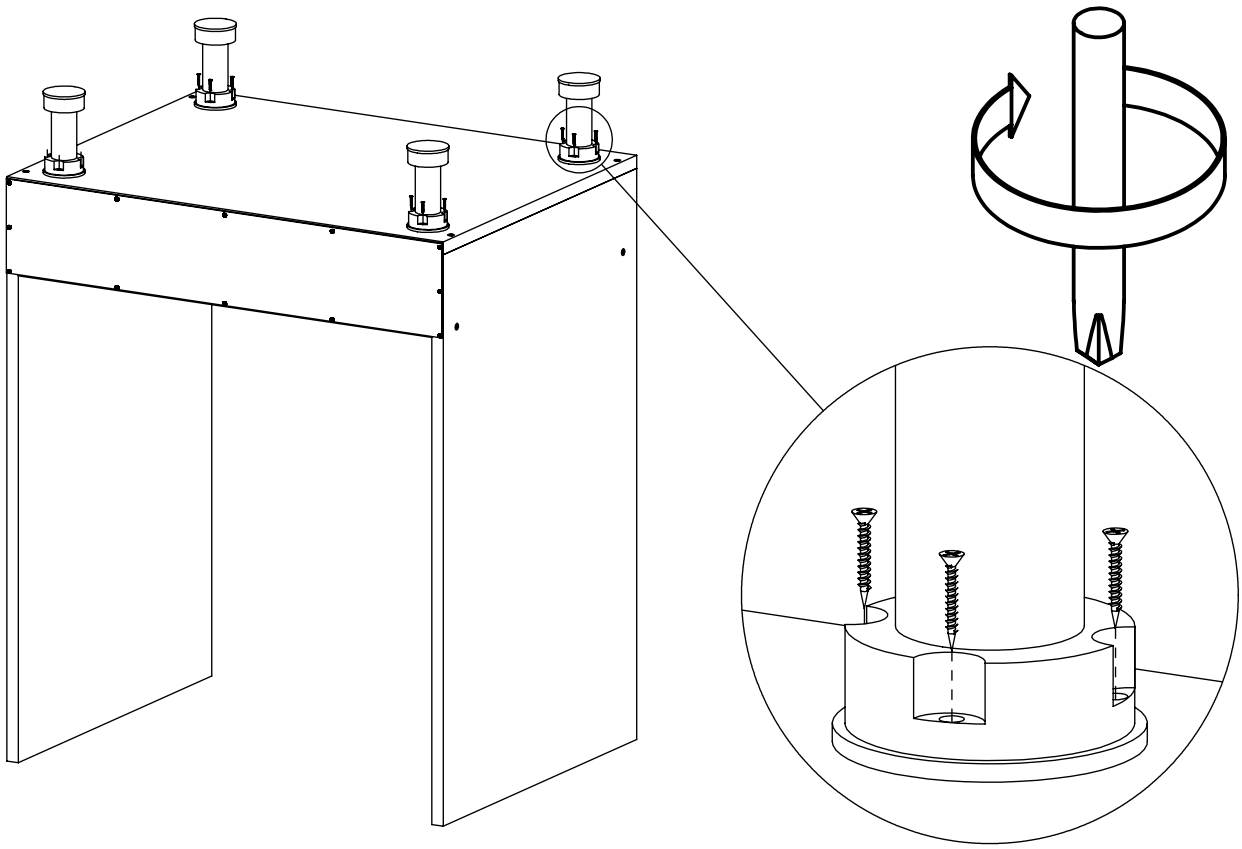

8

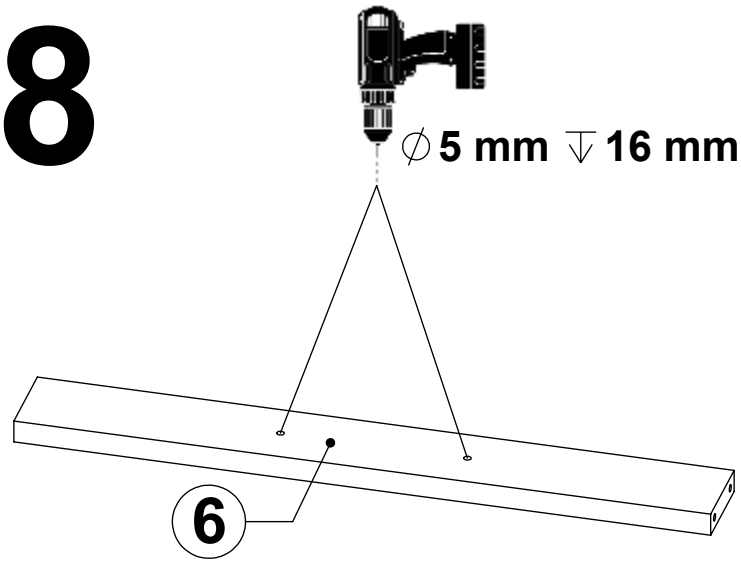

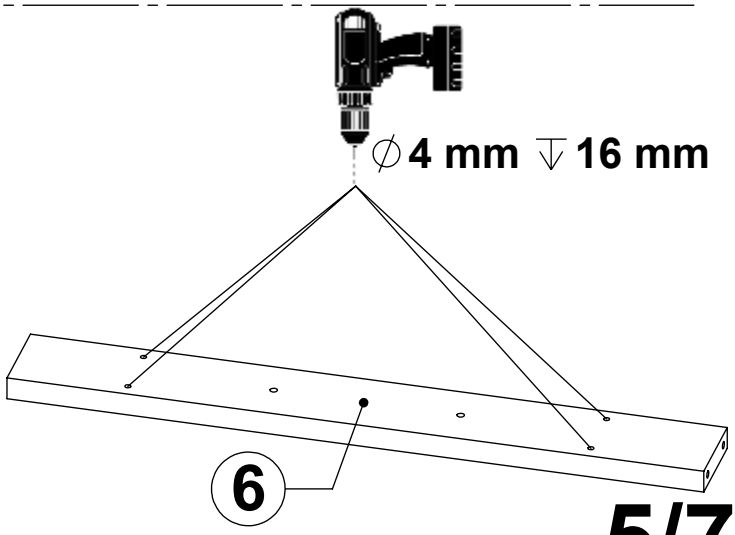

9

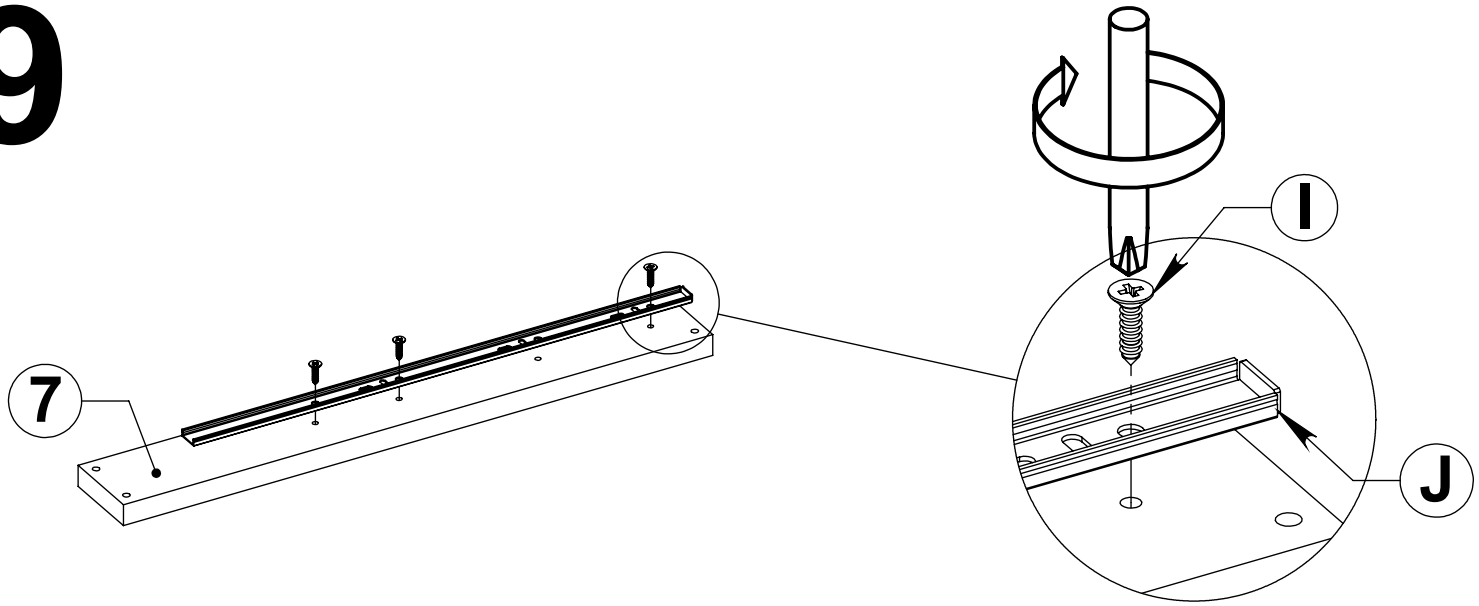

10

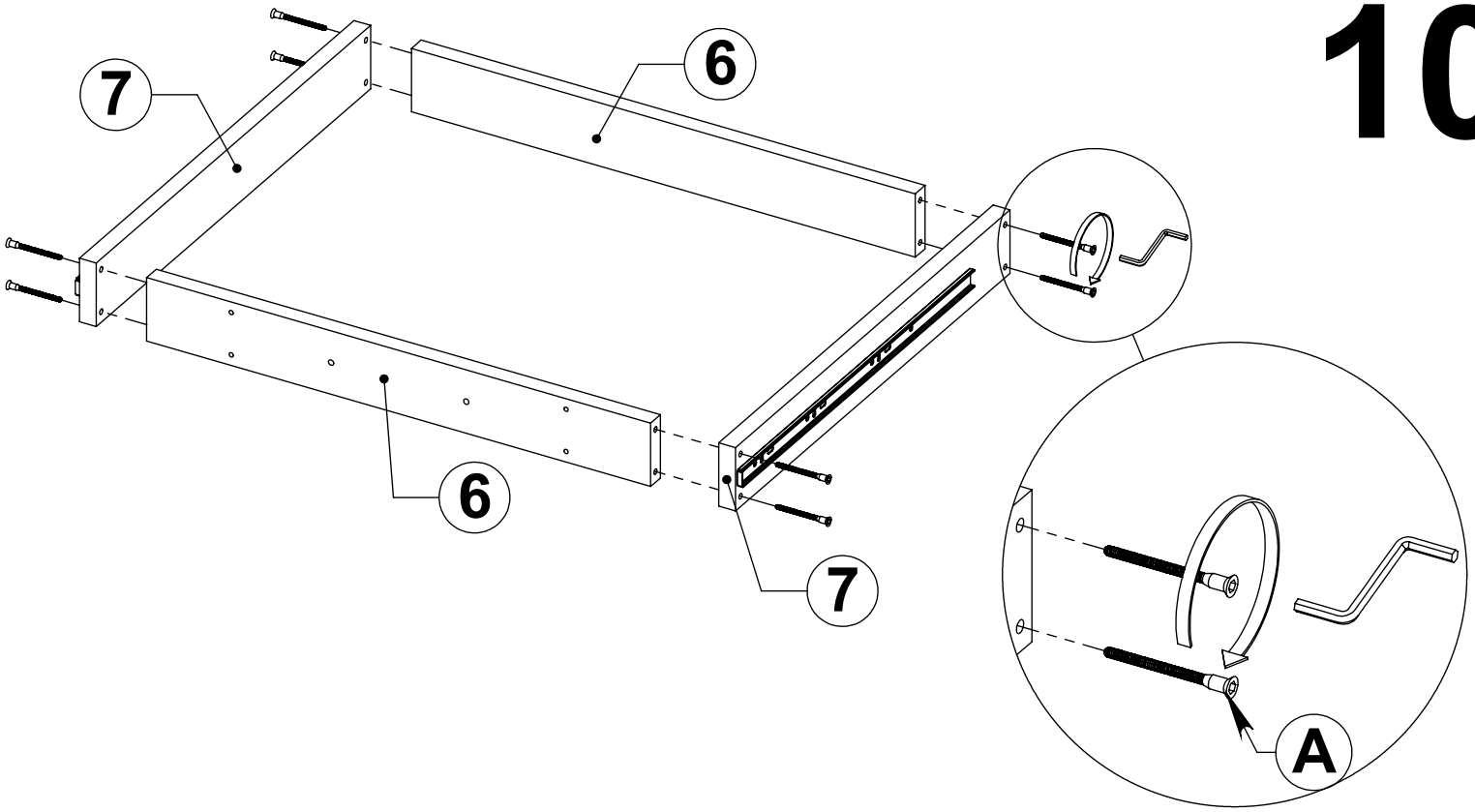

11

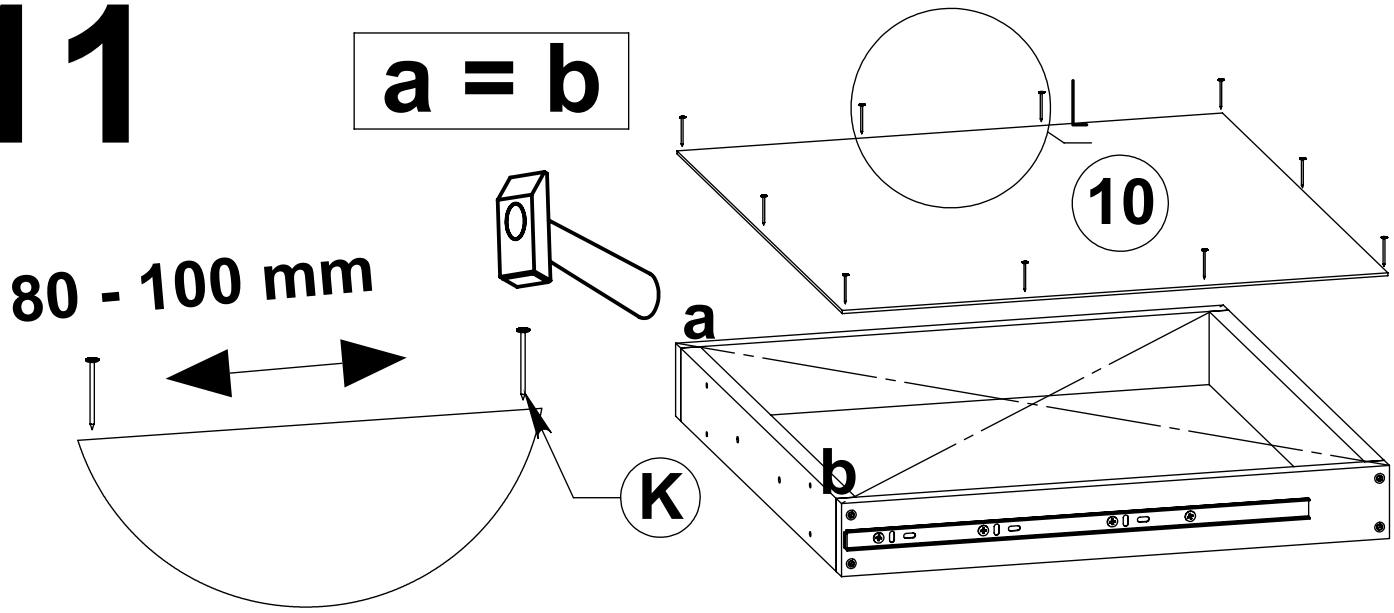

12

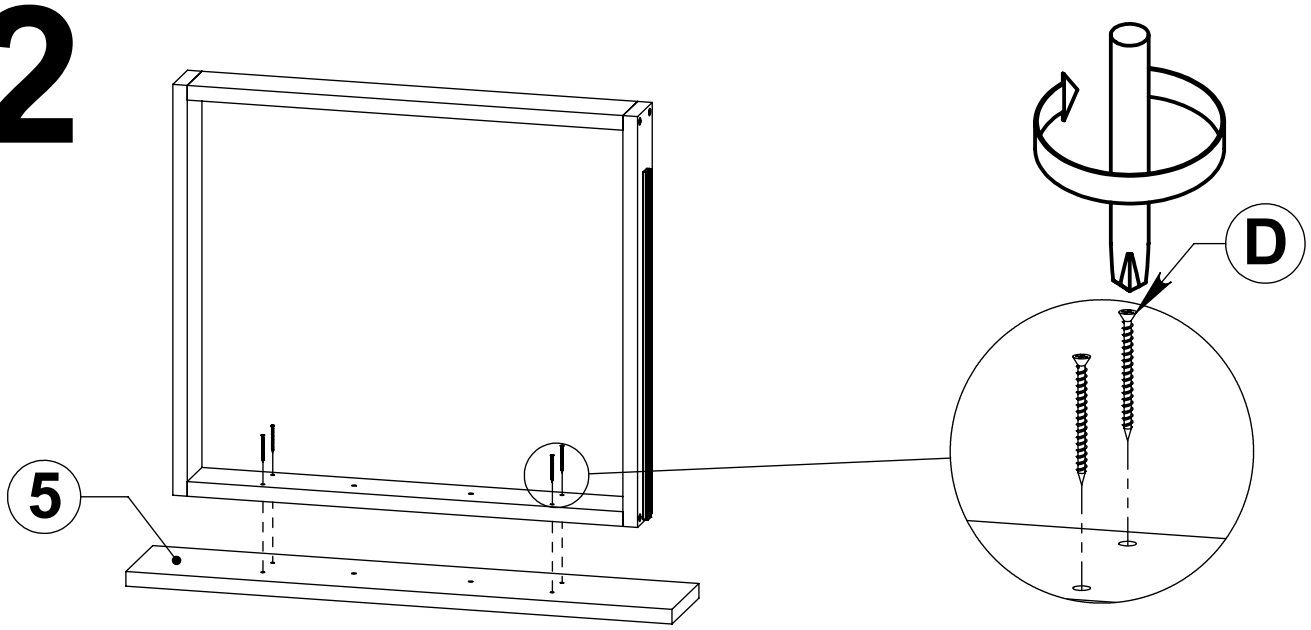

13

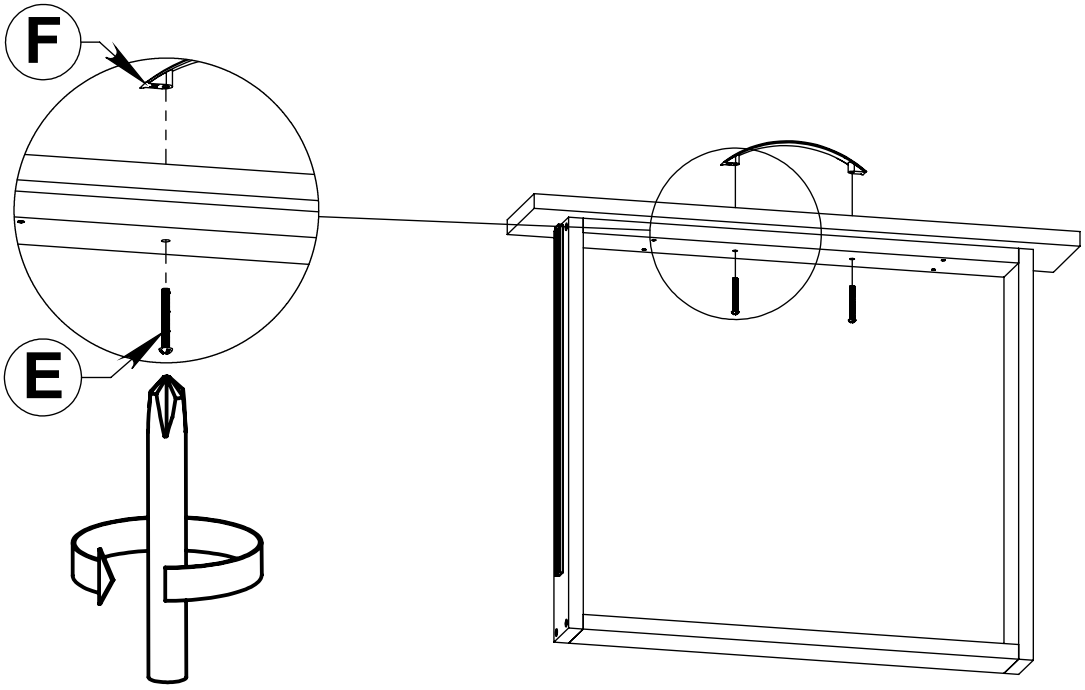
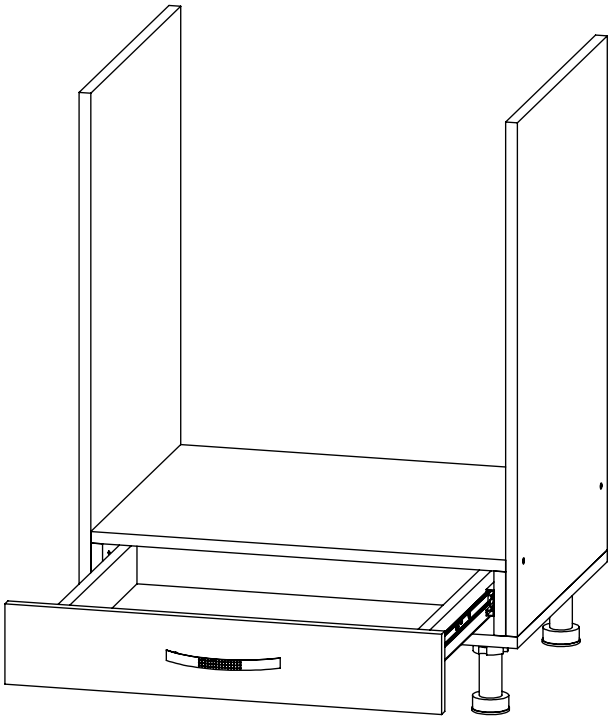
14